STATE OF VERMONT
AGENCY OF TRANSPORTATION

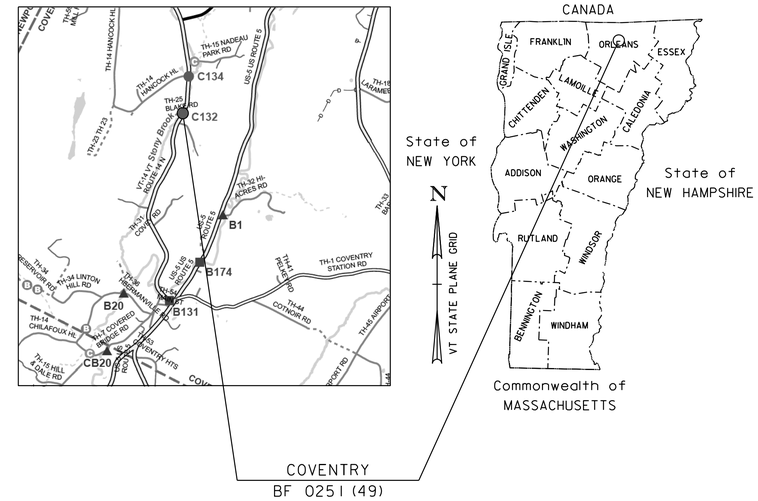

PROPOSED IMPROVEMENT
BRIDGE PROJECT

TOWN OF COVENTRY
COUNTY OF ORLEANS

ROUTE NO : VT ROUTE 14, MAJOR COLLECTOR BRIDGE NO: 132

PROJECT LOCATION: IN THE TOWN OF COVENTRY ON VT ROUTE 14 OVER STONY BROOK, APPROXIMATELY 2.7 MILES SOUTH OF THE JUNCTION WITH VT ROUTE 100.

PROJECT DESCRIPTION: REMOVAL AND REPLACEMENT OF BRIDGE NO. 132 WITH RELATED APPROACH ROADWAY AND CHANNEL WORK.

LENGTH OF STRUCTURE: 25.22 FEET
LENGTH OF ROADWAY: 274.78 FEET
LENGTH OF PROJECT: 300.00 FEET

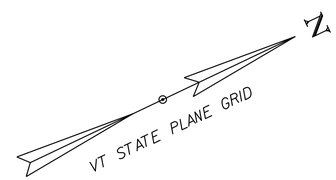

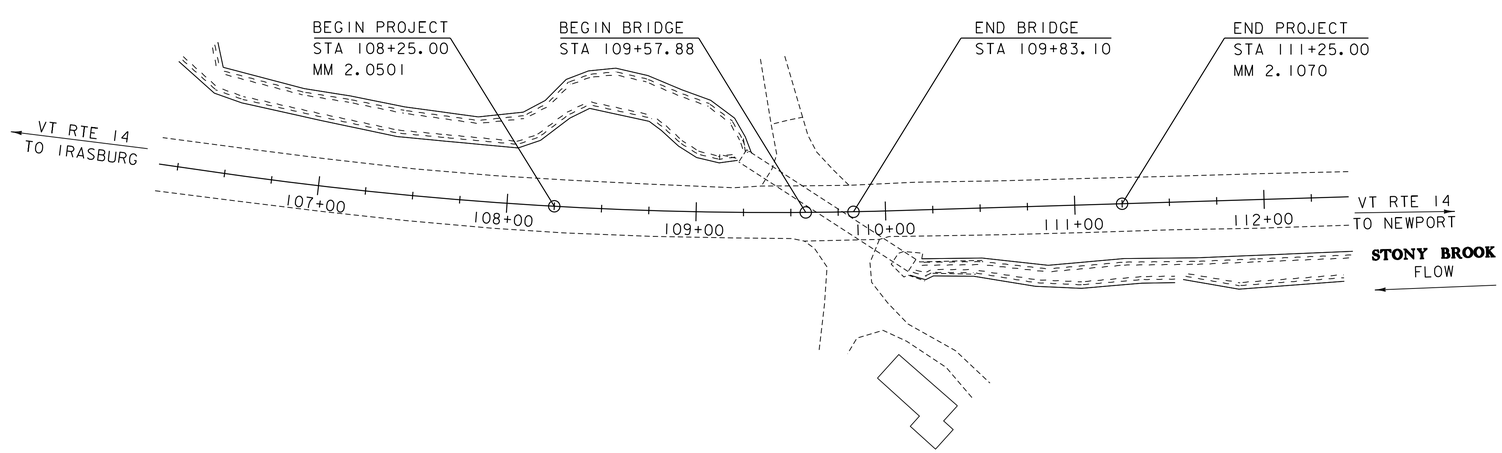

CONSTRUCTION IS TO BE CARRIED ON IN ACCORDANCE WITH THESE PLANS AND THE STANDARD SPECIFICATIONS FOR CONSTRUCTION DATED 2018, AS APPROVED BY THE FEDERAL HIGHWAY ADMINISTRATION ON APRIL 13, 2018 FOR USE ON THIS PROJECT, INCLUDING ALL SUBSEQUENT REVISIONS AND SUCH REVISED SPECIFICATIONS AND SPECIAL PROVISIONS AS ARE INCORPORATED IN THESE PLANS.

QUALITY ASSURANCE PROGRAM : LEVEL 2	
SURVEYED BY :	VTRANS
SURVEYED DATE :	05/2021
DATUM	
VERTICAL	NAVD88
HORIZONTAL	NAD 83 (2011)

SCALE 1" = 40'-0"
40 0 40

HIGHWAY DIVISION, CHIEF ENGINEER	
APPROVED Erin Sisson, P.E.	DATE Nov. 17, 2023
PROJECT MANAGER :	ROBERT KLINEFELTER, P.E.
PROJECT NAME :	COVENTRY
PROJECT NUMBER :	BF 0251(49)
SHEET 1 OF 34 SHEETS	

STATE OF VERMONT
AGENCY OF TRANSPORTATION

PRELIMINARY INFORMATION SHEET (CULVERT)

Version
LRFD

INDEX OF SHEETS

PLAN SHEETS

1	TITLE SHEET
2	PRELIMINARY INFORMATION SHEET
3 - 4	TYPICAL SECTIONS 1-2
5	PROJECT NOTES
6 - 7	QUANTITY SHEET
8	LEGEND SHEET
9	TIE SHEET
10	ALIGNMENT SHEET
11	EXISTING CONDITIONS
12	LAYOUT SHEET
13 - 14	VT 14 PROFILE SHEET 1-2
15	MATERIAL TRANSITION & BANKING DIAGRAM
16	TEMPORARY DRIVE LAYOUT SHEET
17	UTILITY LAYOUT SHEET
18	REGIONAL DETOUR
19	REGIONAL DETOUR DETAILS
20	BORING INFORMATION SHEET
21	BORING LOGS
22	RAIL LAYOUT SHEET
23	MOMENT SLAB
24	BOX CULVERT PLAN AND ELEVATION
25	BOX CULVERT END DETAILS
26 - 30	VT 14 CROSS SECTIONS 1-5
31 - 33	CHANNEL CROSS SECTIONS 1-3
34	EPSC DETAILS

STANDARDS LIST

B-71a	STANDARD FOR RESIDENTIAL DRIVES	04-07-2020
E-10	ROLLED EROSION CONTROL PRODUCT, TYPE I	04-07-2020
E-12	STABILIZED CONSTRUCTION ENTRANCE	04-07-2020
E-15	SILT FENCE	04-07-2020
E-121	STANDARD SIGN PLACEMENT - CONVENTIONAL ROAD	08-08-1995
G-1D	STEEL BEAM GUARDRAIL DETAILS (END TERMINAL, ANCHOR, MEDIAN)	03-10-2017
J-3	MAIL BOX SUPPORT DETAILS	08-07-1995
S-501	CONCRETE DETAILS AND NOTES	04-07-2020
T-1	TRAFFIC CONTROL GENERAL NOTES	04-25-2016
T-2	TRAFFIC SIGN GENERAL NOTES	04-07-2020
T-10	CONVENTIONAL ROADS CONSTRUCTION APPROACH SIGNING	08-06-2012
T-17	TRAFFIC CONTROL MISCELLANEOUS DETAILS	08-06-2012
T-28	CONSTRUCTION SIGN DETAILS	08-06-2012
T-30	CONSTRUCTION SIGN DETAILS	08-06-2012
T-31	CONSTRUCTION SIGN DETAILS	08-06-2012
T-35	CONSTRUCTION ZONE LONGITUDINAL DROP-OFFS	08-06-2012
T-40	DELINEATORS AND MILEPOSTS	01-02-2013
T-42	BRIDGE NUMBER PLAQUE	04-09-2014
T-45	SQUARE TUBE SIGN POST AND ANCHOR	01-02-2013
T-56	STANDARD SIGN PLACEMENT	10-26-2015

DETAIL SHEETS

HSD-400.01	SAFETY EDGE DETAILS	1/5/2018
HSD-621.03	STEEL BEAM GUARDRAIL GALVANIZED/16 FOOT RADIUS	3/27/2022
HSD-621.06	MISCELLANEOUS GUARDRAIL DETAILS	2/27/2017
HSD-621.07A	MIDWEST GUARDRAIL SYSTEM (MGS)	1/4/2021
HSD-621.07B	W-BEAM GUARDRAIL COMPONENTS	4/17/2019
HSD-621.07C	MIDWEST GUARDRAIL SYSTEM (MGS) ANCHOR	4/17/2019
HSD-621.07D	MIDWEST GUARDRAIL SYSTEM (MGS) ANCHOR COMPONENTS	4/17/2019
HSD-621.07E	MIDWEST GUARDRAIL SYSTEM (MGS) ANCHOR COMPONENTS	4/17/2019
HSD-621.07F	MIDWEST GUARDRAIL SYSTEM TRANSITION SECTION	1/4/2021

FINAL HYDRAULICS REPORT

TOWN:	Coventry	COUNTY:	Orleans
PROJECT NO.:	BF 0251(49)	STREAM:	Stoney Brook
HIGHWAY NO.:	Vermont Route 14	STRUCTURE NO.:	Bridge 132

STRUCTURE AND CHANNEL INFORMATION:

DRAINAGE AREA:	4.66 mi^2
DESIGN FLOW FREQUENCY:	2% AEP (Q50)
STRUCTURE SPAN:	12-ft
STRUCTURE HEIGHT:	8-ft
STRUCTURE EMBEDMENT:	2-ft
STRUCTURE INFILL MATERIAL:	E-Stone Fill Type II
STRUCTURE WATERWAY AREA:	72 ft^2
STRUCTURE INLET INVERT ELEVATION:	779.42-ft
STRUCTURE OUTLET INVERT ELEVATION:	777.55-ft
STRUCTURE LENGTH:	93.5-ft

FLOW FREQUENCY:	FLOW:	HEADWATER ELEVATION:	OUTLET VELOCITY:
AEP 50% (Q2):	140 cfs	784.15-ft	6.43-fps
AEP 10% (Q10):	220 cfs	785.78-ft	9.04-fps
AEP 4% (Q25):	280 cfs	786.14-ft	10.06-fps
AEP 2% (Q50):	370 cfs	786.74-ft	10.75-fps
AEP 1% (Q100):	530 cfs	787.51-ft	11.53-fps

TAILWATER ELEVATION @ DESIGN FLOW:	Normal Depth
ROADWAY OVERTOPPING FREQUENCY:	>Q100
DISCHARGE OVER ROAD @ Q100:	None
REQUIRED CHANNEL BANK PROTECTION:	Type II Stone Fill

TRAFFIC MAINTENANCE NOTES

1. MAINTAIN TRAFFIC ON AN OFF SITE DETOUR.
2. TRAFFIC SIGNALS ARE NOT NECESSARY.
3. SIDEWALKS ARE NOT NECESSARY

DESIGN VALUES

1. DESIGN LIVE LOAD		HL-93
2. FUTURE PAVEMENT	d_p:	3.0 INCH
3. CULVERT OPENING	D:	12.00 FT
4. MIN. MID-SPAN POS. CAMBER @ RELEASE (PRESTRESSED UNITS)	Δ:	- - -
5. PRESTRESSING STRAND	f_y:	- - -
6. PRESTRESSED CONCRETE STRENGTH	f'_c:	- - -
7. PRESTRESSED CONCRETE RELEASE STRENGTH	f'_{ci}:	- - -
8. HIGH PERFORMANCE CONCRETE, CLASS PCD	f'_c:	- - -
9. HIGH PERFORMANCE CONCRETE, CLASS PCS	f'_c:	- - -
10. CONCRETE HIGH PERFORMANCE, CLASS SCC	f'_c:	- - -
11. CONCRETE, CLASS C	f'_c:	- - -
12. REINFORCING STEEL	f_y:	60 KSI
13. STRUCTURAL STEEL AASHTO M270 (WEATHERING)	f_y:	50 KSI
14. NOMINAL BEARING RESISTANCE OF SOIL	q_n:	- - -
15. SOIL BEARING RESISTANCE FACTOR (REFER TO AASHTO LRFD)	ϕ:	- - -
16. NOMINAL BEARING RESISTANCE OF ROCK	q_n:	- - -
17. ROCK BEARING RESISTANCE FACTOR (REFER TO AASHTO LRFD)	ϕ:	- - -
18. PILE RESISTANCE FACTOR	ϕ:	- - -
19. LATERAL PILE DEFLECTION	Δ:	- - -
20. BASIC WIND SPEED	V_{3s}:	- - -
21. MINIMUM GROUND SNOW LOAD	p_g:	- - -
22. SEISMIC DATA PGA: - - -	S_s:	- - -
	S_1:	- - -
23.		
24.		- - -
25.		- - -
26.		- - -

LRFR LOAD RATING FACTORS

LOADING LEVELS	TRUCK						
	H-20	HL-93	3S2	6 AXLE	3A. STR.	4A. STR.	5A. SEMI
TONNAGE	20	36	36	66	30	34.5	38
INVENTORY							
POSTING							
OPERATING							
COMMENTS:	TABLE TO BE COMPLETED BY CONTRACTOR'S DESIGNER						

CULVERT DESIGN CRITERIA

1. PROPOSED CULVERT IS A PRECAST CONCRETE STRUCTURE (12'-0" X 8'-0" X 93'-6" BOX).
2. CULVERT ENDS ARE NOT SKEWED.
3. CULVERT WILL BE SET AT A SLOPE OF 12.00 IN. ON 50 FT.
4. CULVERT WILL REQUIRE FISH PASSAGE ACCOMODATIONS
5. CULVERT CONSTRUCTION WILL REQUIRE A TEMPORARY PIPE
6. CULVERT WILL HAVE A 6"X6" BEVEL ON THE OPENING AT THE INLET END

TRAFFIC DATA

YEAR	ADT	DHV	% D	% T
2025	2200	250	58	12.2
2045	2400	270	58	14.9

20 year ESAL for flexible pavement from 2025 to 2045 : 2563000

40 year ESAL for flexible pavement from 2025 to 2065 : 5470000

Design Speed : 50 mph

AS BUILT "REBAR" DETAIL

LEVEL I	LEVEL II	LEVEL III
TYPE:	TYPE:	TYPE:
GRADE:	GRADE:	GRADE:

PROJECT NAME: **COVENTRY**

PROJECT NUMBER: **BF 0251(49)**

FILE NAME:	s21b025PI.dgn	PLOT DATE:	21/2023
PROJECT LEADER:	R. KLINEFELTER	DRAWN BY:	S. COLEY
DESIGNED BY:	S. COLEY	CHECKED BY:	R. KLINEFELTER
PRELIMINARY INFORMATION SHEET		SHEET 2	OF 34

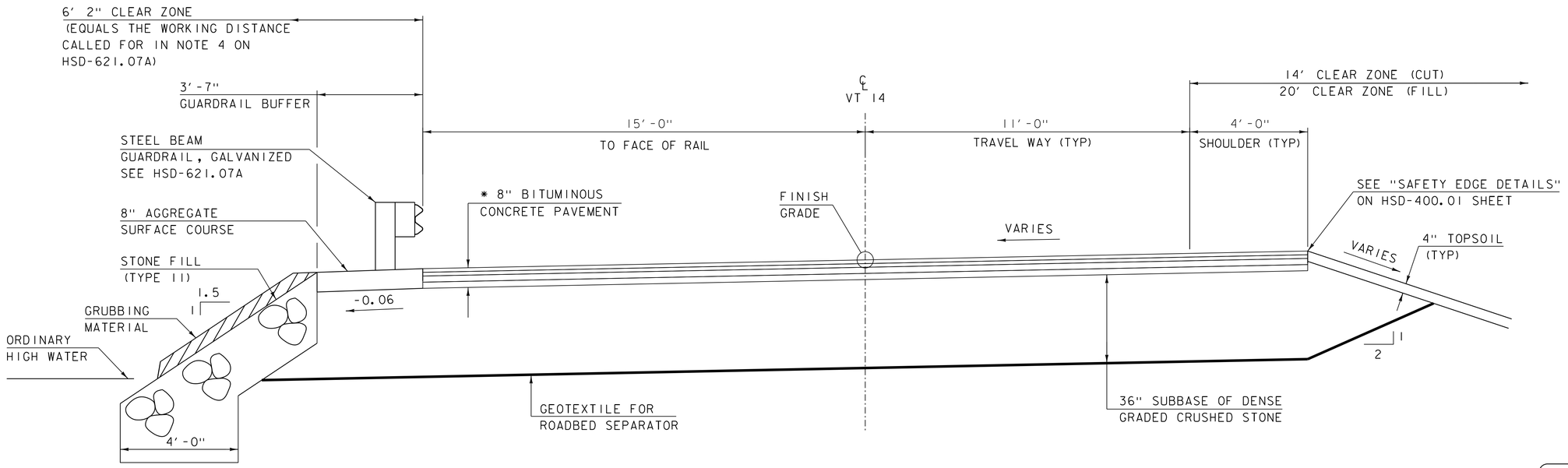

* 1 ½" BITUMINOUS CONCRETE PAVEMENT, TYPE IVS OVER
1 ½" BITUMINOUS CONCRETE PAVEMENT, TYPE IVS OVER
2 ½" BITUMINOUS CONCRETE PAVEMENT, TYPE IIS OVER
2 ½" BITUMINOUS CONCRETE PAVEMENT, TYPE IIS

DESIGN LANE	1,486,540
PERFORMANCE GRADE ASPHALT BINDER	70-28
DESIGN NUMBER OF GYRATIONS	65

VT ROUTE 14 TYPICAL SECTION

SCALE: ½" = 1'-0"

MATERIAL TOLERANCES
(IF USED ON PROJECT)

SURFACE	
- PAVEMENT (TOTAL THICKNESS)	+/- ¼"
- AGGREGATE SURFACE COURSE	+/- ½"
SUBBASE	+/- 1"
SAND BORROW	+/- 1"

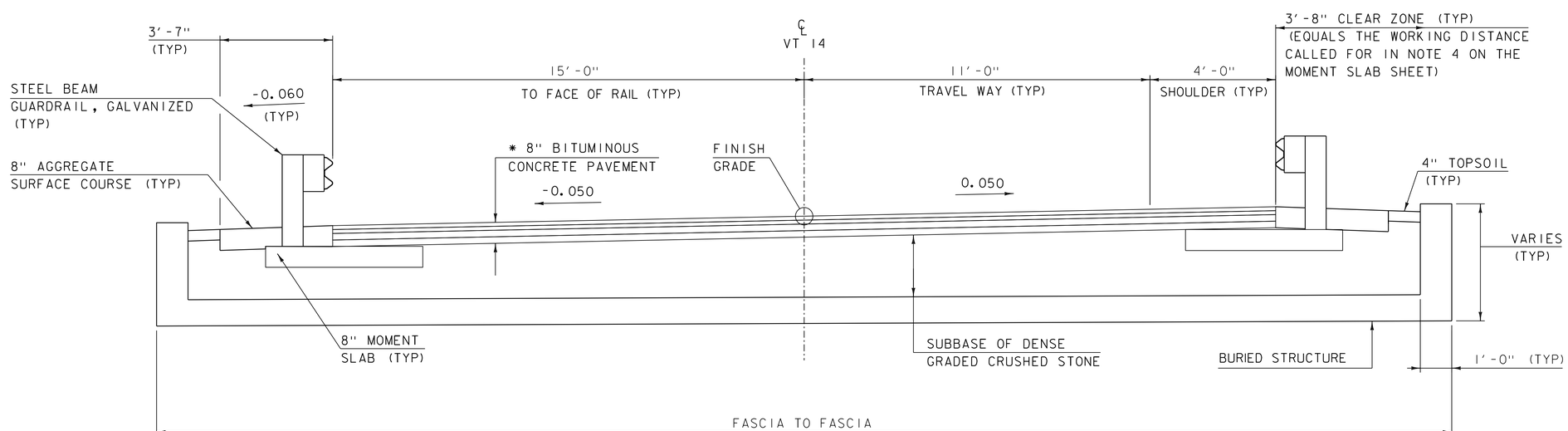

VT ROUTE 14 BURIED STRUCTURE TYPICAL SECTION

SCALE: ½" = 1'-0"

PROJECT NAME:	COVENTRY
PROJECT NUMBER:	BF 0251(49)

FILE NAME: S21b025typ.dgn	PLOT DATE: 21-NOV-2023
PROJECT LEADER: R. KLINEFELTER	DRAWN BY: S. COLEY
DESIGNED BY: S. COLEY	CHECKED BY: R. KLINEFELTER
TYPICAL SECTIONS 1	SHEET 3 OF 34

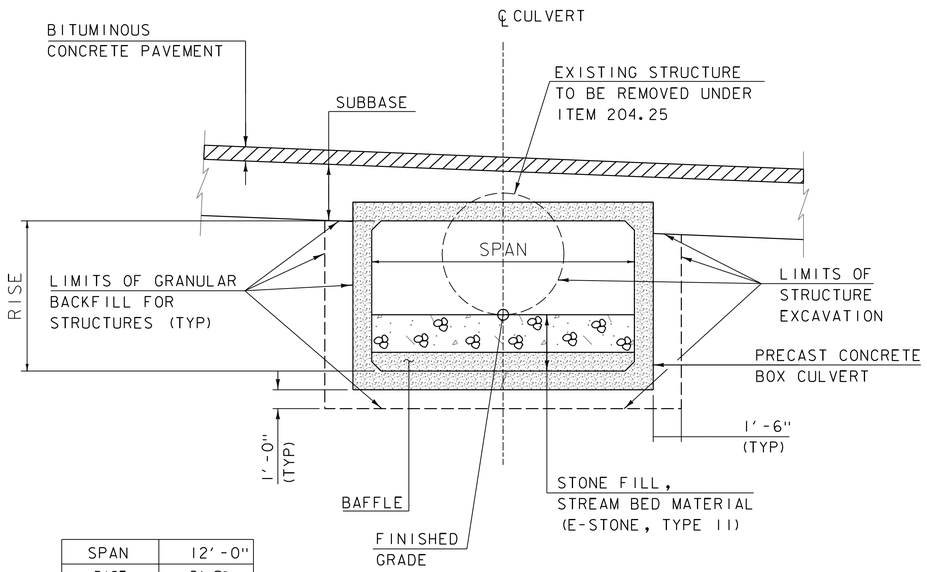

SPAN	12'-0"
RISE	8'-0"
LENGTH	93'-6"

CULVERT TYPICAL SECTION

NOT TO SCALE

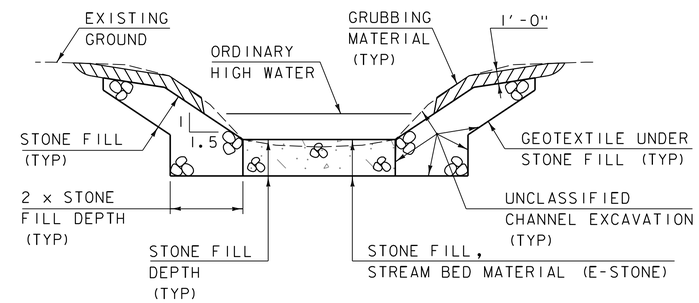

TYPICAL CHANNEL SECTION

(NOT TO SCALE)

1) WHENEVER CHANNEL SLOPE INTERSECTS ROADWAY SUBBASE, GRUBBING MATERIAL SHALL BEGIN AT THE BOTTOM OF SUBBASE.

2) THE CONTRACTOR SHALL CREATE A LOW FLOW CHANNEL IN THE STREAM BED MATERIAL AS DIRECTED BY THE ENGINEER.

3) GRUBBING MATERIAL SHALL BE PLACED UNDERNEATH STRUCTURES WHERE THERE IS MORE THAN 6 FEET VERTICALLY FROM ORDINARY HIGH WATER (OHW) TO THE BOTTOM OF SUPERSTRUCTURE AND MORE THAN 6 FEET HORIZONTALLY FROM OHW LINE TO FRONT FACE OF ABUTMENT. THIS MATERIAL SHALL START JUST ABOVE THE OHW ELEVATION AND TERMINATE 3 FEET HORIZONTALLY FROM THE FRONT FACE OF THE ABUTMENT. THIS MATERIAL SHALL NOT BE PLACED UNDERNEATH DOWNSPOUTS. SEE THE CHANNEL SECTIONS FOR ADDITIONAL DETAILING.

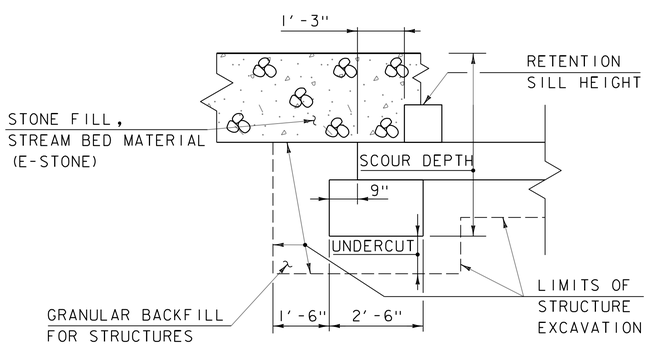

CUTOFF WALL TYPICAL SECTION

NOT TO SCALE

NOTE:

THE CUTOFF WALL MAY BE OMITTED IF THE DEPTH OF STONE FILL, STREAM BED MATERIAL PLUS THE THICKNESS TO THE BOTTOM OF THE BOX MEETS OR EXCEEDS THE LISTED SCOUR DEPTH.

CUTOFF WALL - CRITICAL DIMENSIONS

	DIMENSION
SCOUR DEPTH	5'-0"
RETENTION SILL HEIGHT	1'-0"
UNDERCUT	1'-0"

MATERIAL INFORMATION

	THICKNESS	TYPE	LOCATION
STONE FILL	2'-0"	TYPE II	CHANNEL SLOPES
STONE FILL, STREAM BED MATERIAL	2'-0"	E-STONE, TYPE II	INLET CHANNEL STREAM BED
STONE FILL, STREAM BED MATERIAL	2'-0"	E-STONE, TYPE II	CULVERT STREAM BED
STONE FILL, STREAM BED MATERIAL	2'-0"	E-STONE, TYPE III	OUTLET CHANNEL STREAM BED

GENERAL NOTES

1. ALL MATERIALS AND CONSTRUCTION SHALL CONFORM TO THE VERMONT AGENCY OF TRANSPORTATION 2018 STANDARD SPECIFICATIONS FOR CONSTRUCTION, THE AASHTO LRFD BRIDGE DESIGN SPECIFICATIONS 9TH EDITION, AND THEIR LATEST REVISIONS.

2. ALL DIMENSIONS ARE HORIZONTAL OR VERTICAL, AND ARE GIVEN AT 68 DEGREES FARENHEIT UNLESS NOTED OTHERWISE.

3. THE CONTRACTOR IS RESPONSIBLE FOR COORDINATING CONSISTENCY BETWEEN THE FABRICATOR'S SHOP DRAWINGS AND ENSURING THAT ALL PRECAST COMPONENTS FIT TOGETHER.

EARTHWORK NOTES

4. THE REMOVAL OF EXISTING STRUCTURE WILL BE INCIDENTAL TO ITEM 204.25, “STRUCTURE EXCAVATION". THIS WORK SHALL INCLUDE REMOVAL OF THE ENTIRE CULVERT AND ANY EXISTING HEADWALLS OR CRADLE WALLS.

5. THE USE OF EQUIPMENT AND THE METHOD OF BACKFILLING AROUND THE BURIED STRUCTURE SHALL BE IN ACCORDANCE WITH THE FABRICATOR'S RECOMMENDATIONS. CARE SHALL BE TAKEN WHEN BACKFILLING AGAINST JOINT SEALING MATERIALS.

UTILITY NOTES

6. EXISTING AERIAL TRANSMISSION, DISTRIBUTION, AND COMMUNICATION LINES ARE TO REMAIN IN PLACE DURING CONSTRUCTION. THE CONTRACTOR SHALL COORDINATE WITH VERMONT ELECTRIC COOPERATIVE FOR (1) – 10 HOUR OUTAGE FOR 3-PHASE DISTRIBUTION LINES AND THE 3 EASTERN MOST TRANSMISSION LINES DURING CONSTRUCTION. THERE WILL BE NO OUTAGE FOR THE 3 WESTERN MOST TRANSMISSION LINES. (SEE UTILITY SPECIAL PROVISIONS)

EROSION CONTROL NOTES

7. THE CONTRACTOR SHALL PROVIDE A SITE-SPECIFIC EROSION PREVENTION AND SEDIMENT CONTROL PLAN IN ACCORDANCE WITH SECTION 653 OF THE STANDARD SPECIFICATIONS FOR CONSTRUCTION. ESTIMATED QUANTITIES FOR EPSC WORK HAVE BEEN INCLUDED IN THE CONTRACT FOR BIDDING PURPOSES. IF THE CONTRACTOR’S EPSC PLAN REQUIRE ITEMS OF WORK THAT ARE NOT INCLUDED IN THE PLANS IT SHALL BE PAID FOR AS PART OF ITEM 653.03 “MAINTAINENCE OF EPSC PLAN”.

WET AREA SEED NOTES

8. WET AREA SEED TO BE PAID FOR UNDER 900.635 SPECIAL PROVISION (WET AREA SEED). APPLICATION RATES VARY BY SEED MIX. WET AREA SEED TO BE ONE OF THE FOLLOWING, OR APPROVED EQUAL:
   - VERMONT WET MEADOW & DETENTION BASIN MIX SUPPLIER: VERMONT WETLAND PLANT SUPPLY. APPLICATION RATE: 35 LBS/ACRE.
   - NEW ENGLAND WET MIX (WETLAND SEED MIX) SUPPLIER: NEW ENGLAND WETLAND PLANTS, INC. APPLICATION RATE: 18 LBS/ACRE.
   - PA NEW ENGLAND PROVINCE FACW MIX SUPPLIER: ERNST CONSERVATION SEEDS, INC. APPLICATION RATE: 20 LBS/ACRE WITH A COVER CROP (GRAIN RYE (1 SEP TO 30 APR; 30 LBS/ACRE). JAPANESE MILLET OR BARNYARD GRASS (1 MAY TO 31 AUG; 10 LBS/ACRE)).

9. SEEDED AREAS SHALL BE PROTECTED IN ACCORDANCE WITH SPECIFICATION SUBSECTION 651.07 PROTECTION.WHERE WETLANDS OR WETLAND BUFFERS ARE PRESENT, STRAW MULCH SHALL BE USED INSTEAD OF HAY MULCH.

10. IF AREAS WITHIN PDF OR BARRIER FENCE ARE NOT DISTURBED, THEY SHOULD REMAIN VEGETATED, AND ADDITIONAL REVEGETATION IS NOT REQUIRED.

11. WETLAND SEED SHALL BE USED WITHIN THE WETLAND AND WETLAND BUFFER.

PRECAST CONCRETE NOTES

12. ALL CORNERS OF CONCRETE SHALL BE CHAMFERED 1” UNLESS NOTED OTHERWISE. ALL LIFTING POINTS SHALL BE REMOVABLABLE OR COVERABLE TO THE MINIMUM CLEAR COVER FOR REINFORCING STEEL SPECIFIED IN THE PLANS. THE LIFTING POINTS SHALL BE DETAILED IN THE APPROPRIATE FABRICATION DRAWING. PAYMENT FOR THIS WORK WILL BE CONSIDERED INCIDENTAL TO THE PRECAST ITEM.

13. ALL RECESSED LIFTING POINTS AND BLOCK OUTS SHALL BE FILLED WITH A TYPE IV MORTAR PER SUBSECTION 540.11 AND 707.03. PAYMENT WILL BE CONSIDERED INCIDENTAL TO THE APPROPRIATE PRECAST ITEM.

14. WATERPROOFING MEMBRANE SYSTEM, TYPE III - MEETING THE REQUIREMENTS OF 726.11(c) - SHALL BE APPLIED IN TWO-FOOT STRIPS OVER JOINTS IN THE BOX CULVERT. EXTEND THE SHEET MEMBRANE DOWN THE ENTIRE SIDE AND ACROSS THE TOP OF THE STRUCTURE. COVER THE SIDES OF THE STRUCTURE PRIOR TO THE TOPS. ANY OVERLAPPING OF MEMBRANE SHALL BE DONE IN A SHINGLED STYLE WITH A MINIMUM OVERLAP OF ONE FOOT. A 1" THICK POLYSTYRENE INSULATION BOARD - MEETING THE REQUIREMENTS OF 735.01 - SHALL BE PLACED OVER THE MEMBRANE PRIOR TO BACKFILLING. PAYMENT FOR THIS WORK AND MATERIALS IS INCIDENTAL TO THE APPROPRIATE PRECAST ITEM.

15. CLEAR COVER ON THE REINFORCING STEEL SHALL BE ACCORDING TO THE FOLLOWING UNLESS NOTED OTHERWISE:

A.	INSIDE FACES OF BOX	1.5 INCHES
B.	EXPOSED TO EARTH OR WEATHER	2.0 INCHES
C.	TOP OF OUTSIDE FACES OF BOX	2.5 INCHES
D.	DIRECT EXPOSURE TO DEICING SALTS (HEADWALL, FASCIA, CURB, ETC.)	3.0 INCHES
E.	CAST AGAINST EARTH	3.0 INCHES

16. A BRIDGE PLAQUE FURNISHED BY THE AGENCY SHALL BE CAST INTO WINGWALL 1. SEE STD S-501 FOR FURTHER DETAILS.

17. ALL REINFORCING STEEL SHALL BE LEVEL II.

TRAFFIC CONTROL NOTES

18. THE CONTRACTOR IS RESPONSIBLE FOR THE DESIGN, IMPLEMENTATION, AND SUBMITTAL OF A SITE-SPECIFIC TRAFFIC CONTROL PLAN FOR ALL STAGES OF CONSTRUCTION. CLEARLY DETAIL HOW TRAFFIC WILL BE MAINTAINED. SPECIFY ALL CONSTRUCTION ACTIVITIES REQUIRING ALTERNATING ONE-WAY TRAFFIC, RELATE THOSE ACTIVITIES TO THE CONSTRUCTION SCHEDULE, AND SHOW APPROPRIATE TEMPORARY TRAFFIC CONTROL. ALL COSTS WILL BE INCLUDED IN ITEM 641.11 “TRAFFIC CONTROL, ALL-INCLUSIVE”.

19. ALL TRAFFIC CONTROL FOR THIS PROJECT SHALL BE INSTALLED IN ACCORDANCE WITH THE 2009 "MANUAL ON UNIFORM TRAFFIC CONTROL DEVICES" (MUTCD) AND THE VERMONT STATE STANDARD DRAWINGS. WHERE CONFLICTS EXIST, MUTCD SHALL GOVERN.

20. PORTABLE CHANGEABLE MESSAGE SIGNS SHALL BE FULLY OPERATIONAL A MINIMUM OF TWO WEEKS PRIOR TO THE BRIDGE CLOSURE PERIOD.

21. PAYMENT FOR MAINTAINING DRIVEWAYS WILL BE INCIDENTAL TO ITEM 641.11 “TRAFFIC CONTROL ALL-INCLUSIVE”.

22. AFTER THE BRIDGE CLOSURE PERIOD IS COMPLETE, THE CONTRACTOR SHALL MAINTAIN UNPAVED PORTIONS OF THE ROADWAY IN A CONDITION SUITABLE TO THE ENGINEER UNTIL THE ROADWAY IS PAVED. DURING THIS TIME, THE CONTRACTOR SHALL BE READILY AVAILABLE AT ALL TIMES TO PERFORM THE NECESSARY MAINTENANCE TO UNPAVED PORTIONS OF THE ROADWAY. ALL COSTS FOR MAINTAINING THE UNPAVED PORTION OF THE ROADWAY WILL BE CONSIDERED INCIDENTAL TO ITEM 608.15 "POWER GRADER RENTAL".

23. ACCESS TO ALL DRIVES SHALL BE MAINTAINED AT ALL TIMES. TWO 10 FT WIDE TEMPORARY DRIVES ARE SHOWN ON THE TEMPORARY DRIVE LAYOUT SHEET IN ORDER TO MAINTAIN ACCESS TO PROPERTIES NEAREST THE BRIDGE. THE TEMPORARY DRIVES SHALL HAVE A 6” THICK SURFACE OF DENSE GRADED CRUSHED STONE ON TOP OF SUITABLE FILL. A QUANTITY OF ITEM 301.35 “SUBBASE OF DENSE GRADED CRUSHED STONE HAS BEEN INCLUDED FOR THE TEMPORARY DRIVES SURFACE COURSE. ALL ADDITIONAL WORK AND MATERIALS NECESSARY TO INSTALL, MAINTAIN, AND REMOVE THE TEMPORARY DRIVES, AND MAINTAIN ACCESS TO THESE PROPERTIES WILL BE INCIDENTAL TO ITEM 641.11 “TRAFFIC CONTROL ALL-INCLUSIVE”.

24. TEMPORARY TRAFFIC BARRIER SHALL MEET THE REQUIREMENTS OF 621.07. PAYMENT FOR FURNISHING, INSTALATION, MAINTAINING, REMOVAL, AND RESETTING WILL BE INCLUDED UNDER ITEM 641.11 “TRAFFIC CONTROL ALL-INCLUSIVE”.

STATE OF VERMONT
AGENCY OF TRANSPORTATION

QUANTITY SHEET 1

SUMMARY OF ESTIMATED QUANTITIES				TOTALS		DESCRIPTIONS			
1011 - ROADWAY	1051 - EROSION CONTROL	1211 - BRIDGE NO. 1	1999 - FULL C.E. ITEMS	GRAND TOTAL	FINAL	UNIT	ITEMS	ITEM NUMBER	ROUND
1				1		LS	CLEARING AND GRUBBING, INCLUDING INDIVIDUAL TREES AND STUMPS	201.10	
1925				1925		CY	COMMON EXCAVATION	203.15	
		200		200		CY	UNCLASSIFIED CHANNEL EXCAVATION	203.27	
1				1		CY	TRENCH EXCAVATION OF EARTH, EXPLORATORY (N.A.B.I.)	204.22	
		750		750		CY	STRUCTURE EXCAVATION	204.25	
		425		425		CY	GRANULAR BACKFILL FOR STRUCTURES	204.30	
315				315		SY	COARSE-MILLING, BITUMINOUS PAVEMENT	210.10	
1600				1600		CY	SUBBASE OF DENSE GRADED CRUSHED STONE	301.35	
60				60		CY	AGGREGATE SURFACE COURSE	401.10	
23				23		CWT	EMULSIFIED ASPHALT	404.65	
40				40		SY	HAND-PLACED BITUMINOUS CONCRETE MATERIAL, DRIVES	406.38	
1				1		LU	PRICE ADJUSTMENT, ASPHALT CEMENT (N.A.B.I.)	406.50	
		10		10		GAL	WATER REPELLENT, SILANE	514.10	
		1		1		LS	PRECAST CONCRETE STRUCTURE (12 X 8 X 93.5 BOX CULVERT)	540.10	
1				1		LS	CONTRACTOR-FABRICATED PRECAST CONCRETE STRUCTURE (MOMENT SLAB 1)	543.10	
1				1		LS	CONTRACTOR-FABRICATED PRECAST CONCRETE STRUCTURE (MOMENT SLAB 2)	543.10	
1				1		LS	CONTRACTOR-FABRICATED PRECAST CONCRETE STRUCTURE (MOMENT SLAB 3)	543.10	
1				1		LS	CONTRACTOR-FABRICATED PRECAST CONCRETE STRUCTURE (MOMENT SLAB 4)	543.10	
1				1		LS	CONTRACTOR-FABRICATED PRECAST CONCRETE STRUCTURE (MOMENT SLAB 5)	543.10	
1				1		LS	CONTRACTOR-FABRICATED PRECAST CONCRETE STRUCTURE (MOMENT SLAB 6)	543.10	
100				100		HR	POWER GRADER RENTAL	608.15	
		100		100		CY	STONE FILL, STREAM BED MATERIAL (E-STONE, TYPE II)	613.06	
		80		80		CY	STONE FILL, STREAM BED MATERIAL (E-STONE, TYPE III)	613.06	
		300		300		CY	STONE FILL, TYPE II	613.11	
2				2		EACH	REMOVE AND RESET MAILBOX, SINGLE SUPPORT	617.10	
606				606		LF	STEEL BEAM GUARDRAIL, GALVANIZED	621.20	
3				3		EACH	ANCHOR FOR STEEL BEAM RAIL	621.60	
337				337		LF	REMOVAL AND DISPOSAL OF GUARDRAIL	621.80	
200				200		HR	UNIFORMED TRAFFIC OFFICERS	630.10	
720				720		HR	FLAGGERS	630.15	
			1	1		LS	FIELD OFFICE, ENGINEERS	631.10	
			1	1		LS	TESTING EQUIPMENT, CONCRETE	631.16	
			1	1		LS	TESTING EQUIPMENT, BITUMINOUS	631.17	
			1	1		LS	TESTING EQUIPMENT, GROUT	631.19	
			3000	3000		DL	FIELD OFFICE COMMUNICATIONS (N.A.B.I.)	631.26	
4				4		EACH	CPM SCHEDULE	633.10	
1				1		LS	MOBILIZATION/DEMOBILIZATION	635.11	
1				1		LS	TRAFFIC CONTROL, ALL-INCLUSIVE	641.11	
5				5		EACH	PORTABLE CHANGEABLE MESSAGE SIGN	641.15	
1000				1000		LF	4 INCH WHITE LINE, WATERBORNE PAINT	646.201	

DETAILED SUMMARY OF QUANTITIES

QUANTITIES	UNIT	ITEMS
		EARTHWORKS SUMMARY
		FILL AVAILABLE
1925	CY	COMMON EXCAVATION (1925 X 1.0)
60	CY	UNCLASSIFIED CHANNEL EXCAVATION (200 x 0.3)
225	CY	STRUCTURE EXCAVATION (750 x 0.3)
0	CY	ROUNDING
2,210	**cy**	**TOTAL FILL AVAILABLE**
		FILL REQUIRED
0.69	CY	FACTORED FILL (0.6 X 1.15)
0.31	CY	ROUNDING
1	**CY**	**TOTAL FILL REQUIRED**
2,209	**CY**	**TOTAL WASTE**
		SUPERPAVE BITUMINOUS CONCRETE PAVEMENT
367	TON	BASE COURSE
129	TON	INTERMEDIATE COURSE
144	TON	WEARING COURSE

PROJECT NAME: COVENTRY
PROJECT NUMBER: BF 025I(49)

FILE NAME: s21b025qty.dgn
PROJECT LEADER: R. KLINEFELTER
DESIGNED BY: S. COLEY
QUANTITY SHEET 1

PLOT DATE: 21-NOV-2023
DRAWN BY: S. COLEY
CHECKED BY: R. KLINEFELTER
SHEET 6 OF 34

STATE OF VERMONT
AGENCY OF TRANSPORTATION

QUANTITY SHEET 2

SUMMARY OF ESTIMATED QUANTITIES				TOTALS		DESCRIPTIONS			
1011 - ROADWAY	1051 - EROSION CONTROL	1211 - BRIDGE NO. 1	1999 - FULL C.E. ITEMS	GRAND TOTAL	FINAL	UNIT	ITEMS	ITEM NUMBER	ROUND
1000				1000		LF	4 INCH YELLOW LINE, WATERBORNE PAINT	646.2111	
2050				2050		SY	GEOTEXTILE FOR ROADBED SEPARATOR	649.11	
		400		400		SY	GEOTEXTILE UNDER STONE FILL	649.31	
	35			35		LB	SEED	651.15	
	225			225		LB	FERTILIZER	651.18	
	1			1		TON	AGRICULTURAL LIMESTONE	651.20	
	90			90		CY	TOPSOIL	651.35	
		290		290		SY	GRUBBING MATERIAL	651.40	
	1			1		LS	EPSC PLAN	653.01	
	40			40		HR	MONITORING EPSC PLAN	653.02	
	1			1		LU	MAINTENANCE OF EPSC PLAN (N.A.B.I.)	653.03	
	1			1		TON	HAY MULCH	653.10	
	0.1			0.1		TON	STRAW MULCH	653.12	
	750			750		SY	ROLLED EROSION CONTROL PRODUCT, TYPE I	653.20	
	30			30		CY	STABILIZED CONSTRUCTION ENTRANCE	653.35	
	1025			1025		LF	SILT FENCE, TYPE I	653.475	
	750			750		LF	BARRIER FENCE	653.50	
	275			275		LF	PROJECT DEMARCATION FENCE	653.55	
	300			300		LF	EROSION LOG	653.60	
0.84				0.84		SF	TRAFFIC SIGN, TYPE A	675.20	
20				20		LF	SQUARE TUBE SIGN POST AND ANCHOR	675.341	
4				4		EACH	REMOVING SIGNS	675.50	
2				2		EACH	RESETTING SIGNS	675.60	
3				3		EACH	DELINEATOR WITH STEEL POST	676.10	
10200				10200		DL	SPECIAL PROVISION (INCENTIVE/DISINCENTIVE)(N.A.B.I.)	900.615	
		1		1		EACH	SPECIAL PROVISION (TEMPORARY RELOCATION OF STREAM)	900.620	
1				1		LU	SPECIAL PROVISION (MIXTURE PAY ADJUSTMENT, SMALL QUANTITY)(N.A.B.I.)	900.650	
	3030			3030		SF	SPECIAL PROVISION (WET AREA SEED)	900.670	
640				640		TON	SPECIAL PROVISION (BITUMINOUS CONCRETE PAVEMENT, SMALL QUANTITY)	900.680	

DETAILED SUMMARY OF QUANTITIES		
QUANTITIES	UNIT	ITEMS

PROJECT NAME: COVENTRY
PROJECT NUMBER: BF 0251(49)

FILE NAME: s21b025qty.dgn
PROJECT LEADER: R. KLINEFELTER
DESIGNED BY: S. COLEY
QUANTITY SHEET 2

PLOT DATE: 21-NOV-2023
DRAWN BY: S. COLEY
CHECKED BY: R. KLINEFELTER
SHEET 7 OF 34

GENERAL INFORMATION

SYMBOLOGY LEGEND NOTE

THE SYMBOLOGY ON THIS SHEET IS INTENDED TO COVER STANDARD CONVENTIONAL SYMBOLOGY. THE SYMBOLOGY IS USED FOR EXISTING & PROPOSED FEATURES WITH HEAVIER LINEWEIGHT, IN COMBINATION WITH PROJECT ANNOTATION, AS NOTED ON PROJECT PLAN SHEETS. THIS LEGEND SHEET COVERS THE BASICS. SYMBOLOGY ON PLANS MAY VARY, PLAN ANNOTATIONS AND NOTES SHOULD BE USED TO CLARIFY AS NEEDED.

R.O.W. ABBREVIATIONS (CODES) & SYMBOLS

POINT	CODE	DESCRIPTION
	BF	BARRIER FENCE
	CH	CHANNEL EASEMENT
	CONST	CONSTRUCTION EASEMENT
	CUL	CULVERT EASEMENT
	D&C	DISCONNECT & CONNECT
	DIT	DITCH EASEMENT
	DR	DRAINAGE EASEMENT
	DRIVE	DRIVEWAY EASEMENT
	EC	EROSION CONTROL
	HWY	HIGHWAY EASEMENT
	I&M	INSTALL & MAINTAIN EASEMENT
	LAND	LANDSCAPE EASEMENT
	PDF	PROJECT DEMARCATION FENCE
	R&RES	REMOVE & RESET
	R&REP	REMOVE & REPLACE
	R.T.& I.	RIGHT, TITLE, AND INTEREST
	SR	SLOPE RIGHT
	UE	UTILITY EASEMENT
	(P)	PERMANENT EASEMENT
	(T)	TEMPORARY EASEMENT
■	BNDNS	BOUND SET
⊡	BNDNS	BOUND TO BE SET
◎	IPNF	IRON PIN FOUND
●	IPNS	IRON PIN TO BE SET
⊠	CALC	EXISTING ROW POINT
○	PROW	PROPOSED ROW POINT
[LENGTH]		LENGTH CARRIED ON NEXT SHEET

COMMON TOPOGRAPHIC POINT SYMBOLS

POINT	CODE	DESCRIPTION
	APL	BOUND APPARENT LOCATION
	BM	BENCHMARK
	BND	BOUND
	CB	CATCH BASIN
	COMB	COMBINATION POLE
	DITHR	DROP INLET THROATED DNC
	EL	ELECTRIC POWER POLE
	FPOLE	FLAGPOLE
	GASFIL	GAS FILLER
	GP	GUIDE POST
	GSO	GAS SHUT OFF
	GUY	GUY POLE
	GUYW	GUY WIRE
	GV	GATE VALVE
	H	TREE HARDWOOD
	HCTRL	CONTROL HORIZONTAL
	HVCTRL	CONTROL HORIZ. & VERTICAL
	HYD	HYDRANT
	IP	IRON PIN
	IPIPE	IRON PIPE
	LI	LIGHT - STREET OR YARD
	MB	MAILBOX
	MH	MANHOLE (MH)
	MM	MILE MARKER
	PM	PARKING METER
	PMK	PROJECT MARKER
	POST	POST STONE/WOOD
	RRSIG	RAILROAD SIGNAL
	RRSL	RAILROAD SWITCH LEVER
	S	TREE SOFTWOOD
	SAT	SATELLITE DISH
	SHRUB	SHRUB
	SIGN	SIGN
	STUMP	STUMP
	TEL	TELEPHONE POLE
	TIE	TIE
	TSIGN	SIGN W/DOUBLE POST
	VCTRL	CONTROL VERTICAL
	WELL	WELL
	WSO	WATER SHUT OFF

THESE ARE COMMON VAOT SURVEY POINT SYMBOLS FOR EXISTING FEATURES, ALSO USED FOR PROPOSED FEATURES WITH HEAVIER LINEWEIGHT, IN COMBINATION WITH PROPOSED ANNOTATION.

PROPOSED GEOMETRY CODES

CODE	DESCRIPTION
PC	POINT OF CURVATURE
PI	POINT OF INTERSECTION
CC	CENTER OF CURVE
PT	POINT OF TANGENCY
PCC	POINT OF COMPOUND CURVE
PRC	POINT OF REVERSE CURVE
POB	POINT OF BEGINNING
POE	POINT OF ENDING
STA	STATION PREFIX
AH	AHEAD STATION SUFFIX
BK	BACK STATION SUFFIX
D	CURVE DEGREE OF (100FT)
R	CURVE RADIUS OF
T	CURVE TANGENT LENGTH
L	CURVE LENGTH OF
E	CURVE EXTERNAL DISTANCE
CB	CHORD BEARING

UTILITY SYMBOLOGY

UNDERGROUND UTILITIES

UGU	UTILITY (GENERIC-UNKNOWN)
UT	TELEPHONE
UE	ELECTRIC
UC	CABLE (TV)
UEC	ELECTRIC+CABLE
UET	ELECTRIC+TELEPHONE
UCT	CABLE+TELEPHONE
UECT	ELECTRIC+CABLE+TELEPHONE
G	GAS LINE
W	WATER LINE
S	SANITARY SEWER (SEPTIC)

ABOVE GROUND UTILITIES (AERIAL)

AGU	UTILITY (GENERIC-UNKNOWN)
T	TELEPHONE
E	ELECTRIC
C	CABLE (TV)
EC	ELECTRIC+CABLE
ET	ELECTRIC+TELEPHONE
AER E&T	ELECTRIC+TELEPHONE
CT	CABLE+TELEPHONE
ECT	ELECTRIC+CABLE+TELEPHONE
	UTILITY POLE GUY WIRE

PROJECT CONSTRUCTION SYMBOLOGY

PROJECT DESIGN & LAYOUT SYMBOLOGY

CZ	CLEAR ZONE
	PLAN LAYOUT MATCHLINE

PROJECT CONSTRUCTION FEATURES

	TOP OF CUT SLOPE
	TOE OF FILL SLOPE
	STONE FILL
	BOTTOM OF DITCH ℄
	CULVERT PROPOSED
	STRUCTURE SUBSURFACE
PDF	PROJECT DEMARCATION FENCE
BF	BARRIER FENCE
	TREE PROTECTION ZONE (TPZ)
	STRIPING LINE REMOVAL
	SHEET PILES

CONVENTIONAL BOUNDARY SYMBOLOGY

BOUNDARY LINES

TOWN LINE	TOWN BOUNDARY LINE
COUNTY LINE	COUNTY BOUNDARY LINE
STATE LINE	STATE BOUNDARY LINE
	PROPOSED STATE R.O.W. (LIMITED ACCESS)
	PROPOSED STATE R.O.W.
	STATE ROW (LIMITED ACCESS)
	STATE ROW
	TOWN ROW
	PERMANENT EASEMENT LINE (P)
	TEMPORARY EASEMENT LINE (T)
	SURVEY LINE
P/L	PROPERTY LINE (P/L)
SR	SLOPE RIGHTS
6f	6F PROPERTY BOUNDARY
4f	4F PROPERTY BOUNDARY
HAZ	HAZARDOUS WASTE

EPSC LAYOUT PLAN SYMBOLOGY

EPSC MEASURES

	FILTER CURTAIN
	SILT FENCE
	SILT FENCE WOVEN WIRE
	CHECK DAM
	DISTURBED AREAS REQUIRING RE-VEGETATION
	EROSION MATTING

SEE EPSC DETAIL SHEETS FOR ADDITIONAL SYMBOLOGY

ENVIRONMENTAL RESOURCES

	WETLAND BOUNDARY
	RIPARIAN BUFFER ZONE
	WETLAND BUFFER ZONE
	SOIL TYPE BOUNDARY
T&E	THREATENED & ENDANGERED SPECIES
HAZ	HAZARDOUS WASTE AREA
AG	AGRICULTURAL LAND
HABITAT	FISH & WILDLIFE HABITAT
FLOOD PLAIN	FLOOD PLAIN
OHW	ORDINARY HIGH WATER (OHW)
	STORM WATER
	USDA FOREST SERVICE LANDS
	WILDLIFE HABITAT SUIT/CONN

ARCHEOLOGICAL & HISTORIC

ARCH	ARCHEOLOGICAL BOUNDARY
HISTORIC DIST	HISTORIC DISTRICT BOUNDARY
HISTORIC	HISTORIC AREA
H	HISTORIC STRUCTURE

CONVENTIONAL TOPOGRAPHIC SYMBOLOGY

EXISTING FEATURES

	ROAD EDGE PAVEMENT
	ROAD EDGE GRAVEL
	DRIVEWAY EDGE
	DITCH
	FOUNDATION
	FENCE (EXISTING)
	FENCE WOOD POST
	FENCE STEEL POST
	GARDEN
	ROAD GUARDRAIL
	RAILROAD TRACKS
	CULVERT (EXISTING)
	STONE WALL
	WALL
	WOOD LINE
	BRUSH LINE
	HEDGE
	BODY OF WATER EDGE
	LEDGE EXPOSED

PROJECT NAME: COVENTRY
PROJECT NUMBER: BF 0251(49)

FILE NAME: s21b0251legend.dgn
PROJECT LEADER: R. KLINEFELTER
DESIGNED BY: S. COLEY
CONVENTIONAL SYMBOLOGY LEGEND

PLOT DATE: 21-NOV-2023
DRAWN BY: S. COLEY
CHECKED BY: R. KLINEFELTER
SHEET 8 OF 34

PRIMARY CONTROL

HVCTRL #1
NORTH = 868800.2690
EAST = 1701687.5590
ELEV. = 762.0100

TO REACH FROM THE NORTHERLY INTERSECTION OF ROUTES 5 AND 14 IN COVENTRY, GO NORTH ON ROUTE 14 FOR 1.25 MI (2.01 KM) TO THE SITE OF THE MARK ON THE LEFT, ABOUT 20 M (65.6 FT) SOUTHWEST OF A WOODS ROAD.

THE MARK IS A 3/4 INCH (19 MM) REBAR WITH RED PLASTIC CAP SET 4 CM (2 INCHES) BELOW GROUND SURFACE.

IT IS 6.5 M (21.3 FT) NORTHWEST OF THE CENTERLINE OF ROUTE 14, 16.5 M (54.1 FT) NORTH-NORTHWEST OF A 12 CM (5 INCHES) SPRUCE AND 21.2 M (69.6 FT) WEST OF A 20 CM (8 INCHES) SPRUCE.

HVCTRL #2
NORTH = 871888.3040
EAST = 1702649.4520
ELEV. = 789.5800

TO REACH FROM THE NORTHERLY INTERSECTION OF ROUTES 5 AND 14 IN COVENTRY, GO NORTH ALONG ROUTE 14 FOR 1.9 MI (3.1 KM) TO THE SITE OF THE MARK ON THE LEFT, ABOUT 15 M (49.2 FT) SOUTHWEST OF SPENCER HILL ROAD.

THE MARK IS A 3/4 INCH (19 MM) REBAR WITH RED CAP SET 4 CM (2 INCHES) BELOW GROUND SURFACE.

IT IS 8.1 M (26.6 FT) NORTHWEST OF THE CENTERLINE OF ROUTE 14, 21.7 M (71.2 FT) NORTHWEST OF A 20 CM (8 INCHES) SPRUCE AND 31.8 M (104.3 FT) SOUTHWEST OF POLE 118/75.

PT'S 1 AND 2 COORDINATES WERE DERIVED FROM OPUS RS USING THE RAPID EPHEMERIS

SECONDARY CONTROL

HVCTRL #3

NORTH = 872254.7368
EAST = 1702875.6734
ELEV. = 787.9360

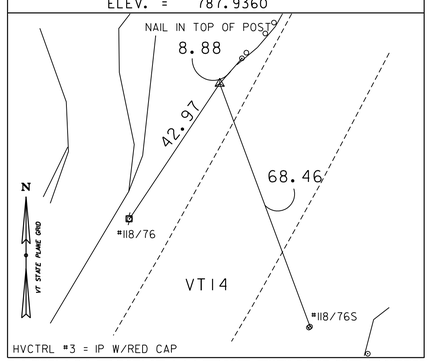

HVCTRL #4

NORTH = 872492.0392
EAST = 1703029.9210
ELEV. = 789.1140

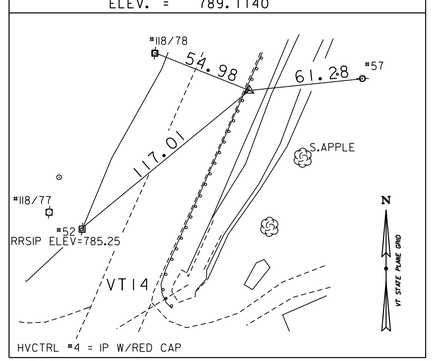

*TRAVERSE COMPLETED ON 5/11/2021 BY R.GILMAN H.MCGOWAN

NORTH =	NORTH =	NORTH =	NORTH =	NORTH =
EAST =	EAST =	EAST =	EAST =	EAST =
ELEV. =	ELEV. =	ELEV. =	ELEV. =	ELEV. =

ALIGNMENT TIES

NORTH =	NORTH =	NORTH =	NORTH =	NORTH =
EAST =	EAST =	EAST =	EAST =	EAST =
ELEV. =	ELEV. =	ELEV. =	ELEV. =	ELEV. =

DATUM

VERTICAL	NAVD 88
HORIZONTAL	NAD83 (2011)
ADJUSTMENT	COMPASS

PROJECT NAME: COVENTRY
PROJECT NUMBER: BF 0251(49)

FILE NAME: X21B025TI.DGN
PROJECT LEADER: R. KLINEFELTER
DESIGNED BY: VTRANS
TIE SHEET

PLOT DATE: 21-NOV-2023
DRAWN BY: H.MCGOWAN
CHECKED BY: R. GILMAN
SHEET 9 OF 34

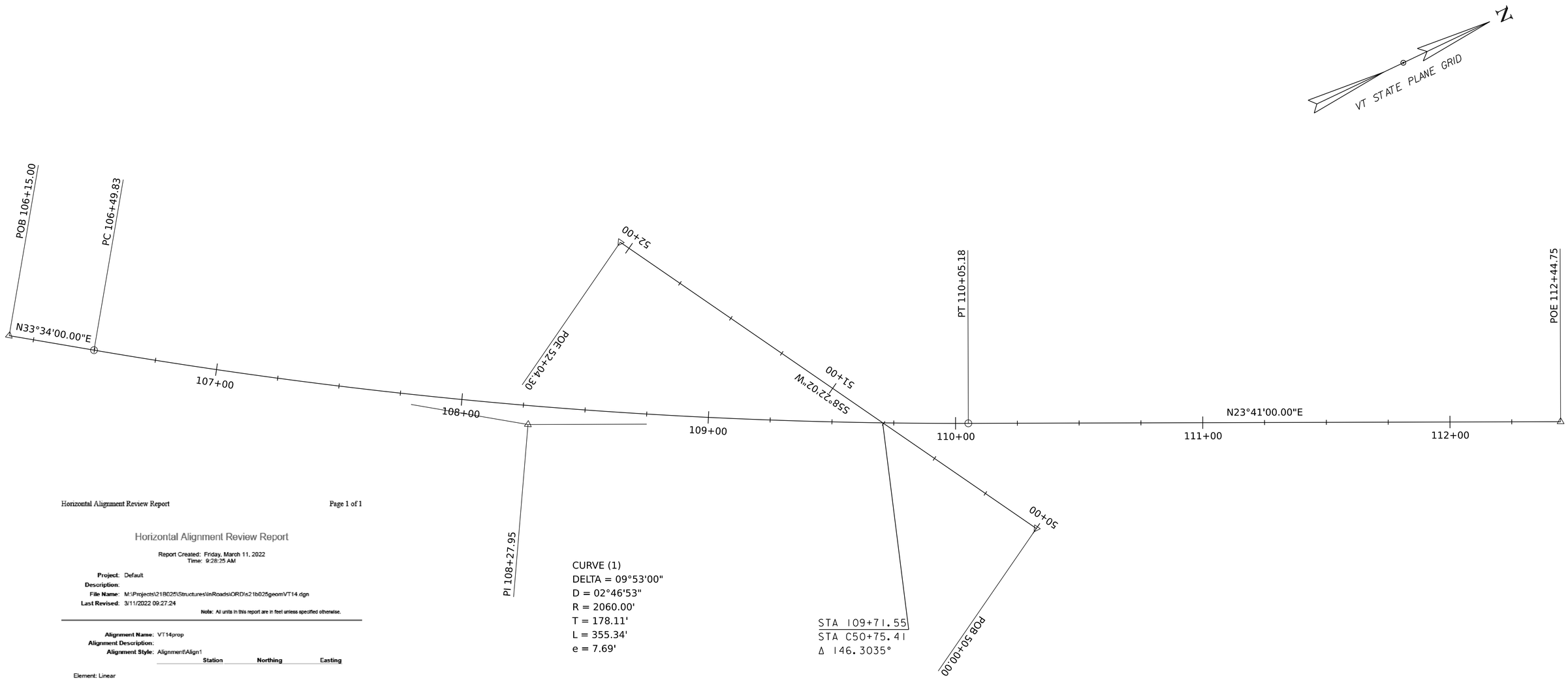

Horizontal Alignment Review Report

Report Created: Friday, March 11, 2022
Time: 9:28:25 AM

Project: Default
Description:
File Name: M:\Projects\21B025\Structures\InRoads\ORD\s21b025geom\VT14.dgn
Last Revised: 3/11/2022 09:27:24

Note: All units in this report are in feet unless specified otherwise.

Alignment Name: VT14prop
Alignment Description:
Alignment Style: Alignment\Align1

		Station	Northing	Easting
Element: Linear				
POB	( )	10615.000	872051.310	1702777.881
PC	( )	10649.832	872080.334	1702797.140
Tangential Direction:		N33.587°E		
Tangential Length:		34.832		
Element: Circular				
PC	( )	10649.832	872080.334	1702797.140
PI	( )	10827.946	872228.746	1702895.620
CC	( )		873219.322	1701080.659
PT	( )	11005.178	872301.858	1702967.165
Radius:		2060.000		
Delta:		9.883° Left		
Degree of Curvature (Arc):		2.781°		
Length:		355.343		
Tangent:		178.113		
Chord:		354.903		
Middle Ordinate:		7.857		
External:		7.686		
Back Tangent Direction:		N33.587°E		
Back Radial Direction:		S56.433°E		
Chord Direction:		N28.625°E		
Ahead Radial Direction:		S66.317°E		
Ahead Tangent Direction:		N23.083°E		
Element: Linear				
PT	( )	11005.178	872301.858	1702967.165
POE	( )	11244.748	872611.254	1703063.397
Tangential Direction:		N23.083°E		
Tangential Length:		239.573		

Horizontal Alignment Review Report

Report Created: Monday, May 1, 2023
Time: 3:20:31 PM

Project: Default
Description:
File Name: C:\Users\scoley\Desktop\Coventry\ORD\s21b025geomchannel.dgn
Last Revised: 5/1/2023 15:12:12

Note: All units in this report are in feet unless specified otherwise.

Alignment Name: CL3_
Alignment Description:
Alignment Style: Alignment\Align3

		Station	Northing	Easting
Element: Linear				
POB	( )	5000.000	872300.820	1703017.198
POE	( )	5204.303	872292.668	1702843.250
Tangential Direction:		S58.367°W		
Tangential Length:		204.303		

SCALE 1" = 20'-0"
20 0 20

PROJECT NAME: COVENTRY	
PROJECT NUMBER: BF 025I(49)	
FILE NAME: s21b025bdr.dgn	PLOT DATE: 21-NOV-2023
PROJECT LEADER: R. KLINEFELTER	DRAWN BY: S. COLEY
DESIGNED BY: S. COLEY	CHECKED BY: R. KLINEFELTER
ALIGNMENT SHEET	SHEET 10 OF 34

SOIL INFORMATION:
RUMNEY FINE SANDY LOAM
Kfactws = 0.20, 0% TO 3% SLOPES
HYDROLOGICAL SOIL GROUP: B/D

SOIL INFORMATION:
COLTON-DUXBURY COMPLEX
25% TO 60% SLOPES
HYDROLOGICAL SOIL GROUP: A

VT STATE PLANE GRID

N/F
BLAKE, APRIL M.

N/F
PIKE INDUSTRIES, INC.

RIPARIAN BUFFER

AER E

APPROX. EXISTING R.O.W.

(BLAKE RD)

AER E&T

OHW

780'

VT ROUTE 14
TO TRASBURG

VT ROUTE 14
TO NEWPORT

107+00

108+00

109+00

110+00

111+00

112+00

790'

7'-8" X 5'-6" CONCRETE FLOW

STONY BROOK
FLOW

GRAVEL
DRIVE

N/F
DROWN, CHARLES W. SR.

N/F
SANVILLE, ISRAEL B. & DENISE S.

N/F
DROWN, CHARLES W. SR.

SOIL INFORMATION:
ADAMS LOAMY SAND
Kfactws = 0.15, 15% TO 25% SLOPES
HYDROLOGICAL SOIL GROUP: A

SCALE 1" = 20'-0"
20 0 20

PROJECT NAME: COVENTRY	
PROJECT NUMBER: BF 0251(49)	
FILE NAME: 21b025ero.dgn	PLOT DATE: 21-NOV-2023
PROJECT LEADER: R. KLINEFELTER	DRAWN BY: S. COLEY
DESIGNED BY: S. COLEY	CHECKED BY: R. KLINEFELTER
EXISTING CONDITIONS	SHEET 11 OF 34

CONSTRUCT 5' PAVED APRON
STA 109+78 RT

CONSTRUCT PAVED DRIVE
STA 109+59 LT

CONSTRUCT GRAVEL DRIVE
STA 109+59 LT
STA 109+78 RT

REMOVE AND RESET MAILBOX, SINGLE SUPPORT
STA 109+51 RT
STA 109+52 RT

4" YELLOW LINE, WATERBORNE (DOUBLE)
STA 107+25 - 112+25

4" WHITE LINE, WATERBORNE
STA 107+25 - 112+25 LT AND RT

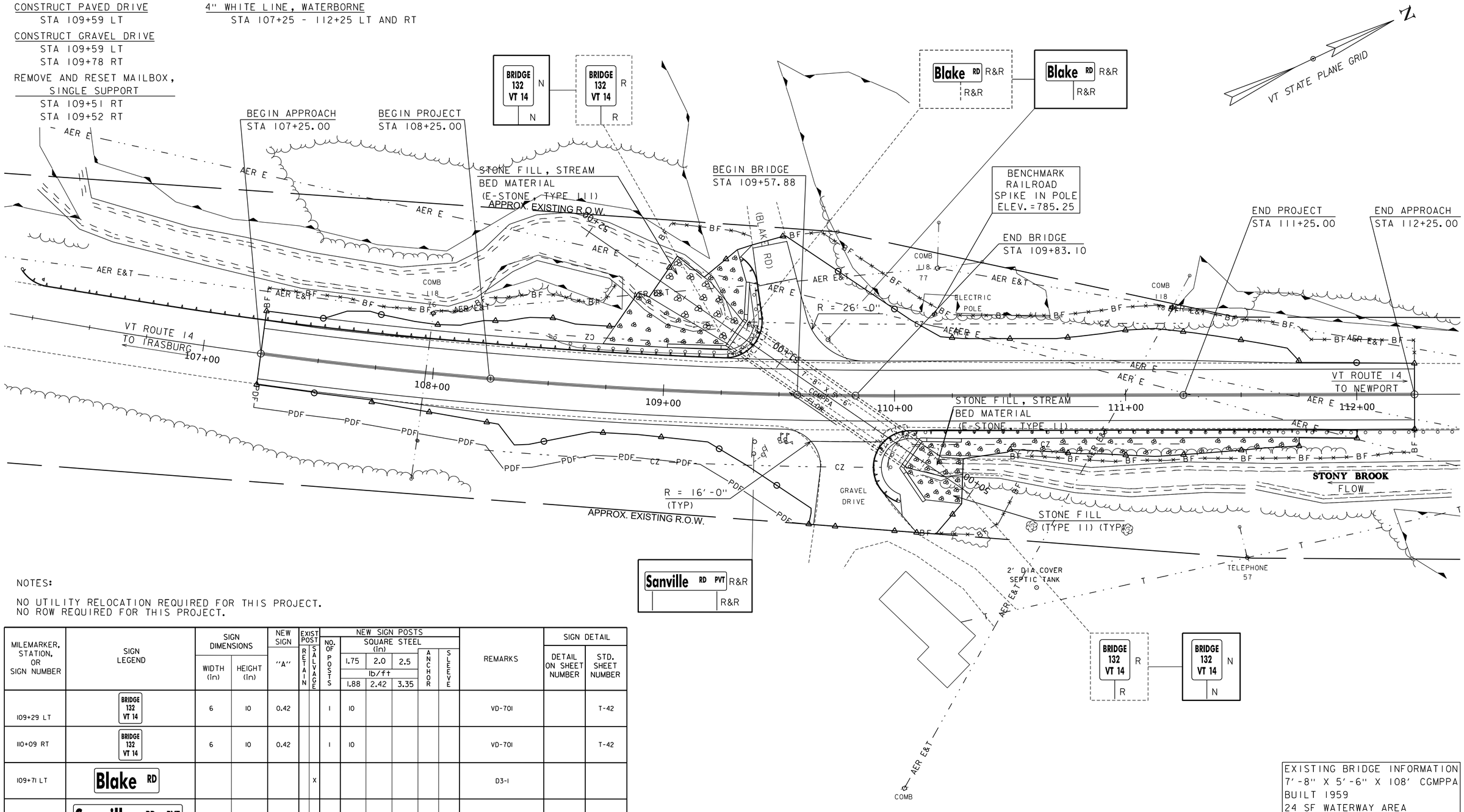

NOTES:

NO UTILITY RELOCATION REQUIRED FOR THIS PROJECT.
NO ROW REQUIRED FOR THIS PROJECT.

MILEMARKER, STATION, OR SIGN NUMBER	SIGN LEGEND	SIGN DIMENSIONS WIDTH (in)	SIGN DIMENSIONS HEIGHT (in)	NEW SIGN "A"	EXIST POST RETAIN	EXIST POST SALVAGE	NO. OF POSTS	NEW SIGN POSTS SQUARE STEEL (in) 1.75 lb/ft 1.88	2.0 lb/ft 2.42	2.5 lb/ft 3.35	ANCHOR	SLEEVE	REMARKS	SIGN DETAIL DETAIL ON SHEET NUMBER	SIGN DETAIL STD. SHEET NUMBER
109+29 LT	BRIDGE 132 VT 14	6	10	0.42			1	10					VD-701		T-42
110+09 RT	BRIDGE 132 VT 14	6	10	0.42			1	10					VD-701		T-42
109+71 LT	Blake RD					X							D3-1		
109+40 RT	Sanville RD PVT					X							D3-1		
FINAL POST LENGTHS ARE TO BE DETERMINED IN THE FIELD. POST SIZES ARE COMPUTED BASED ON INFORMATION FURNISHED ON THE STANDARD SHEETS AND THE VTRANS "SIGN POST DESIGN GUIDELINE."								FT 20	FT	FT		EA			
		TOTALS		SF 0.84				FT 20					SHS = STANDARD HIGHWAY SIGNS (MUTCD)		

SIGN LEGEND

N = NEW
R = REMOVE
R&S = REMOVE & SALVAGE
R&R = REMOVE & RESET

SCALE 1" = 20'-0"
20 0 20

EXISTING BRIDGE INFORMATION
7'-8" X 5'-6" X 108' CGMPPA
BUILT 1959
24 SF WATERWAY AREA
4' AVERAGE COVER

PROJECT NAME: COVENTRY
PROJECT NUMBER: BF 0251(49)

FILE NAME: s21b025bdr.dgn
PROJECT LEADER: R. KLINEFELTER
DESIGNED BY: S. COLEY
LAYOUT SHEET

PLOT DATE: 21-NOV-2023
DRAWN BY: S. COLEY
CHECKED BY: R. KLINEFELTER
SHEET 12 OF 34

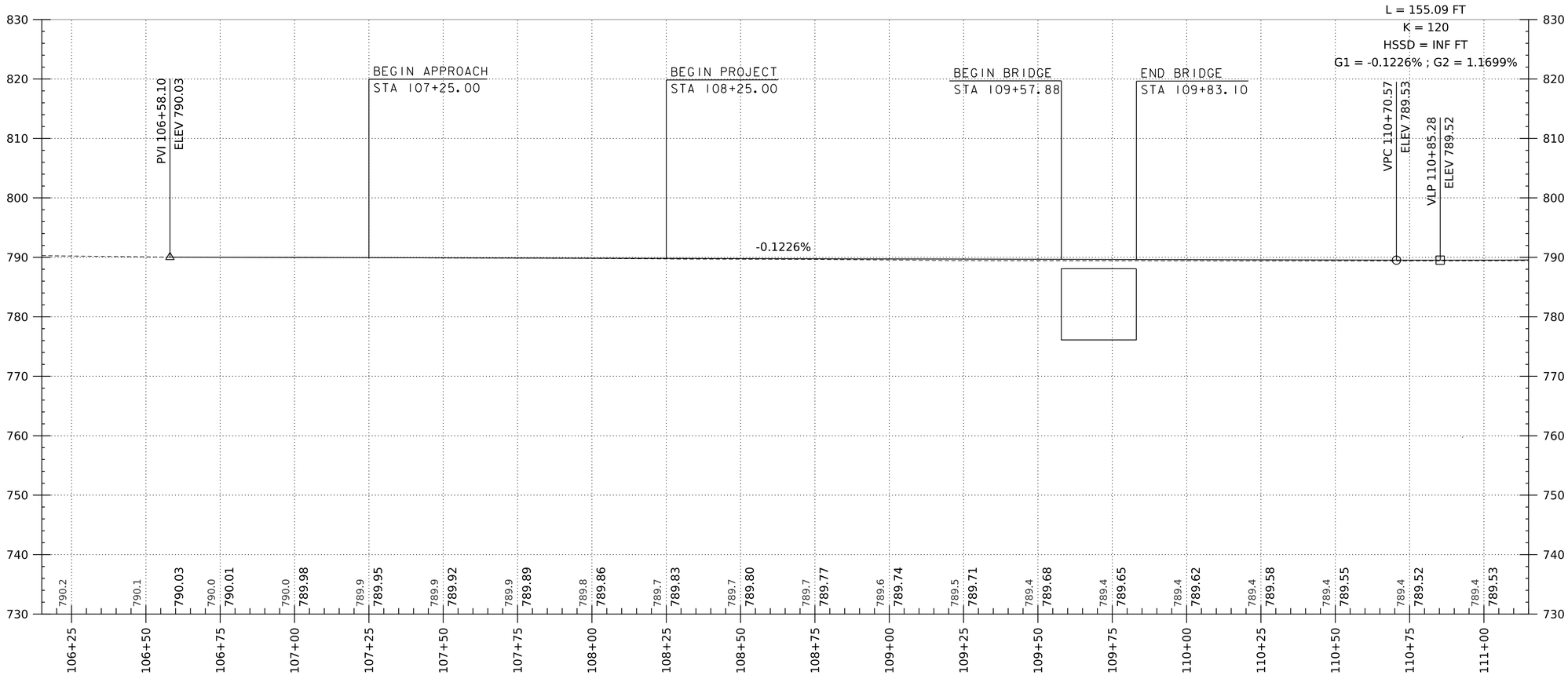

HORIZONTAL SCALE: 1" = 20'-0"
VERTICAL SCALE: 1" = 10'-0"

PROJECT NAME: COVENTRY	
PROJECT NUMBER: BF 0251(49)	
FILE NAME: s21b025pro.dgn	PLOT DATE: 21-NOV-2023
PROJECT LEADER: R. KLINEFELTER	DRAWN BY: S. COLEY
DESIGNED BY: S. COLEY	CHECKED BY: R. KLINEFELTER
VT 14 PROFILE SHEET 1	SHEET 13 OF 34

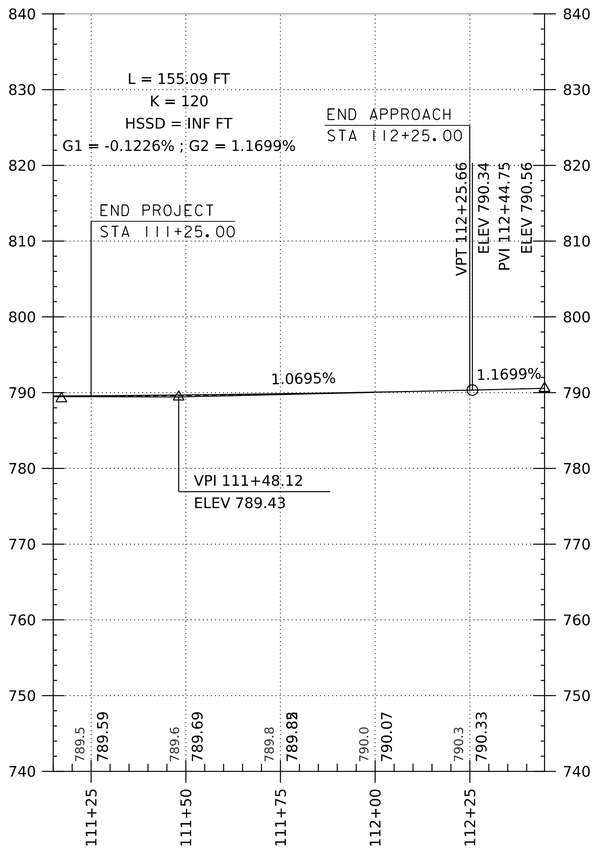

HORIZONTAL SCALE: 1" = 20'-0"
VERTICAL SCALE: 1" = 10'-0"

PROJECT NAME: COVENTRY	
PROJECT NUMBER: BF 0251(49)	
FILE NAME: s21b025pro.dgn	PLOT DATE: 21-NOV-2023
PROJECT LEADER: R. KLINEFELTER	DRAWN BY: S. COLEY
DESIGNED BY: S. COLEY	CHECKED BY: R. KLINEFELTER
VT 14 PROFILE SHEET 2	SHEET 14 OF 34

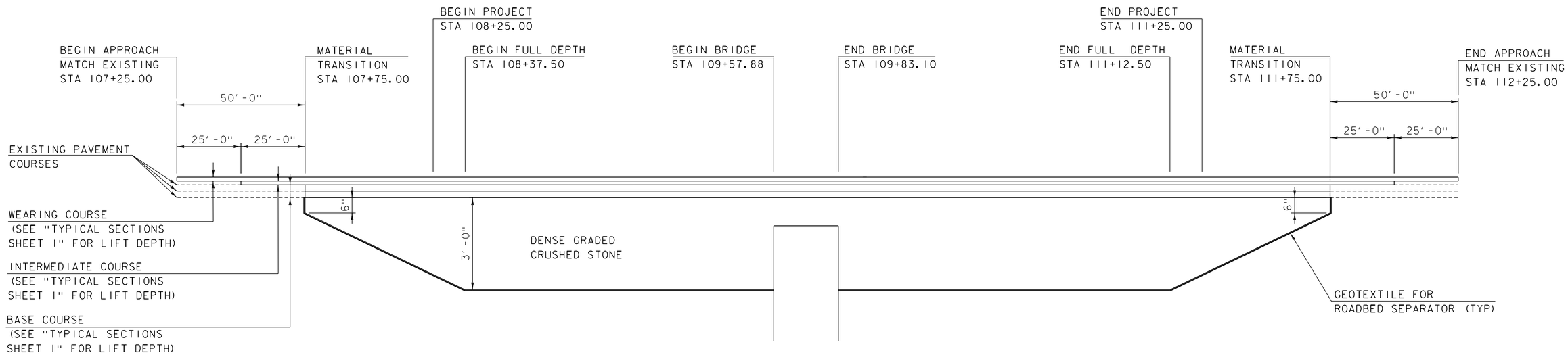

MATERIAL TRANSITION

NOT TO SCALE

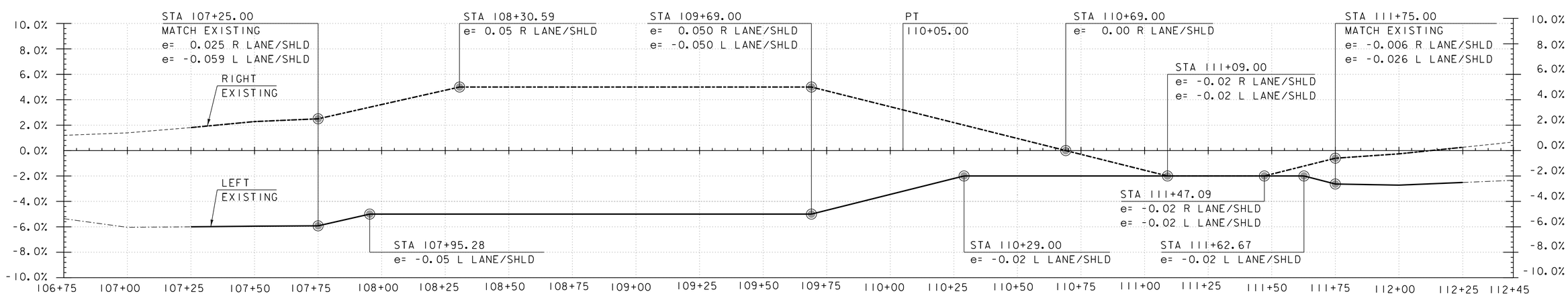

BANKING DIAGRAM

HOR. SCALE 1" =20'-0"
NO VER. SCALE

---------- e= R EXISTING
- - - - - - e= R LANE/SHLD
-·-·-·-·- e= L EXISTING
——— e= L LANE/SHLD

PROJECT NAME: COVENTRY	
PROJECT NUMBER: BF 0251(49)	
FILE NAME: s21b025superelevation.dgn	PLOT DATE: 21-NOV-2023
PROJECT LEADER: R. KLINEFELTER	DRAWN BY: S. COLEY
DESIGNED BY: S. COLEY	CHECKED BY: R. KLINEFELTER
MATERIAL TRANSITION & BANKING DIAGRAM	SHEET 15 OF 34

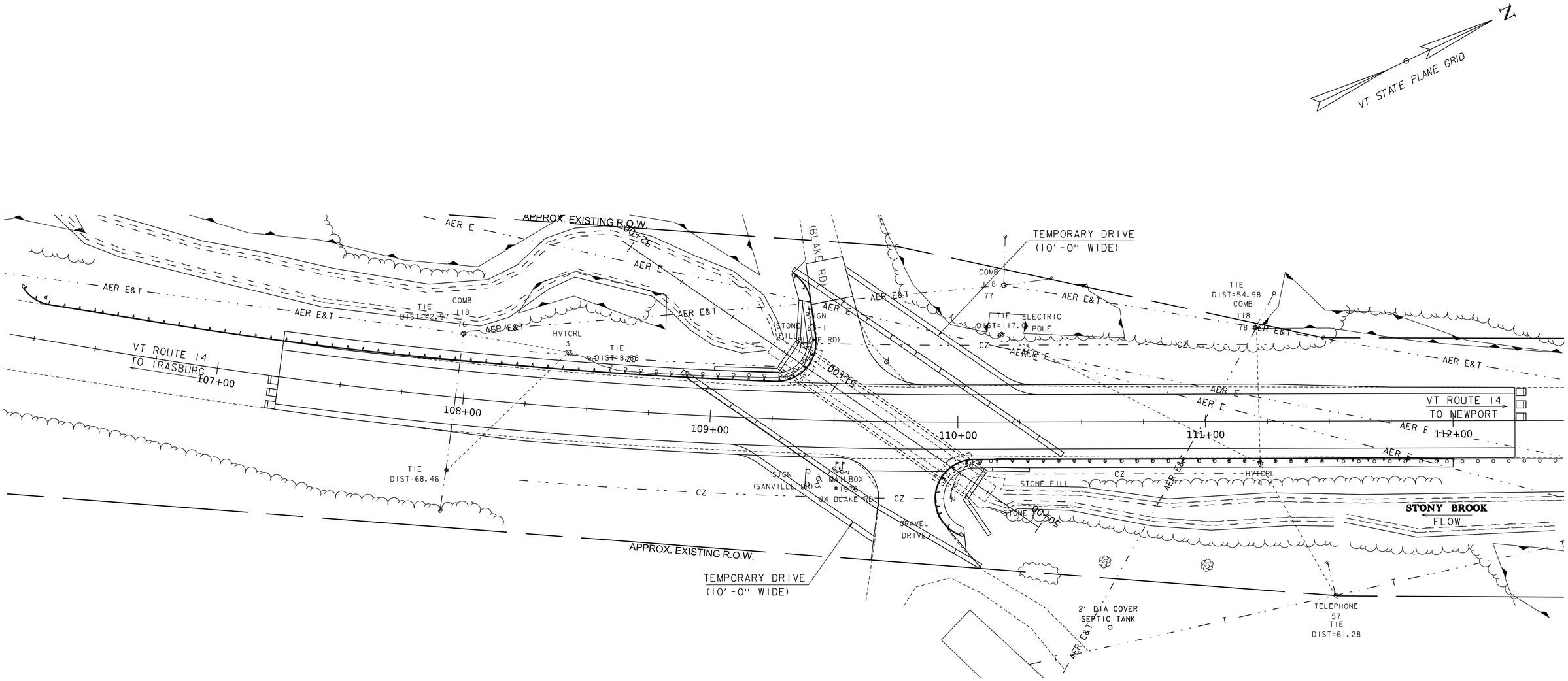

TEMPORARY DRIVE LAYOUT

SCALE 1" = 20'-0"

20 0 20

LEGEND
TYPE III BARRICADE
TYPE III (MOD) BARRICADE
TEMPORARY TRAFFIC BARRIER
SEE T-SERIES STANDARDS FOR ADDITIONAL DETAILS

NOTE

THE NUMBER OF TYPE III BARRICADES AND OTHER TRAFFIC CONTROL DEVICES SHOWN ARE FOR ILLUSTRATIVE PURPOSES ONLY. THE ACTUAL NUMBER REQUIRED ARE TO BE DETERMINED BASED ON INDIVIDUAL ROADWAY CLOSURE REQUIREMENTS AND SHALL BE DETAILED IN THE SITE-SPECIFIC TRAFFIC CONTROL PLAN FOR ALL STAGES OF CONSTRUCTION. ALL COSTS WILL BE INCLUDED IN THE ITEM 641.11 "TRAFFIC CONTROL, ALL-INCLUSIVE".

PROJECT NAME: COVENTRY
PROJECT NUMBER: BF 0251(49)

FILE NAME: s21b025tcp.dgn
PROJECT LEADER: R. KLINEFELTER
DESIGNED BY: S. COLEY
TEMPORARY DRIVE LAYOUT SHEET

PLOT DATE: 21-NOV-2023
DRAWN BY: C. MOONEY
CHECKED BY: TBD
SHEET 16 OF 34

ELEVATIONS ARE CONSIDERED APPROXIMATE AND SHALL
BE VERIFIED BY THE CONTRACTOR AS NECESSARY.

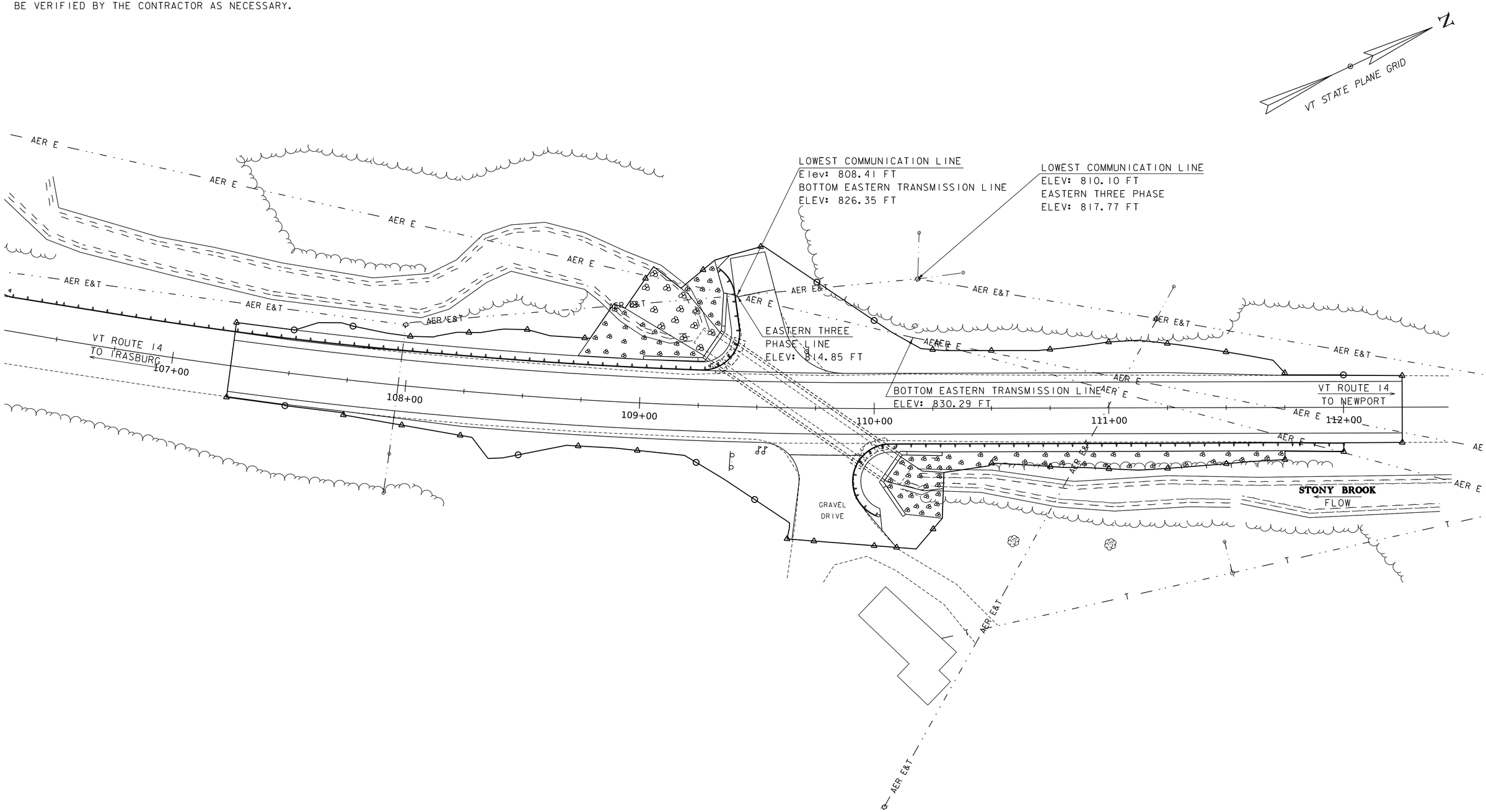

SCALE 1" = 20'-0"
20 0 20

REVISION	PLOT DATE	DESCRIPTION	BY
1	11-30-2023	FIXED PAGE NUMBERING DISPLAY ISSUE	CAM

PROJECT NAME: COVENTRY
PROJECT NUMBER: BF 0251(49)

FILE NAME: s21b025bdr_util.dgn
PROJECT LEADER: R. KLINEFELTER
DESIGNED BY: S. COLEY
UTILITY LAYOUT SHEET

PLOT DATE: 30-NOV-2023
DRAWN BY: S. COLEY
CHECKED BY: R. KLINEFELTER
SHEET 17 OF 34

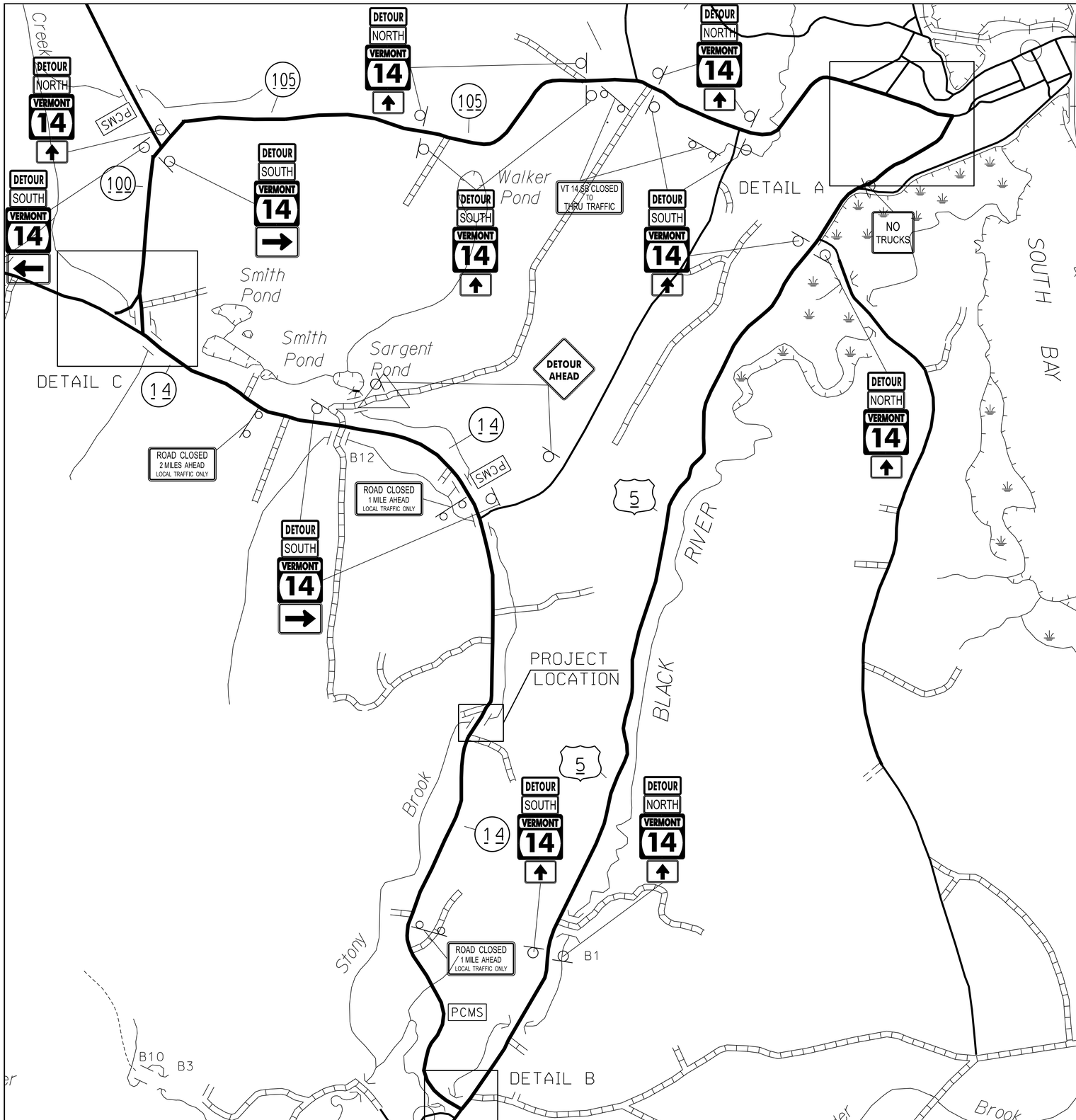

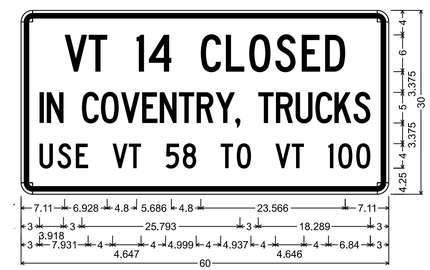

1.875" Radius, 0.750" Border, 0.500" Indent, Black on White;
"VT 14 CLOSED", C 80% spacing;
"IN COVENTRY, TRUCKS", C specified length;
"USE VT 58 TO VT 100", C specified length;

PLACE AT INTERSECTIONS OF US 5/VT 58, VT 14/VT 58, VT 101/VT 100

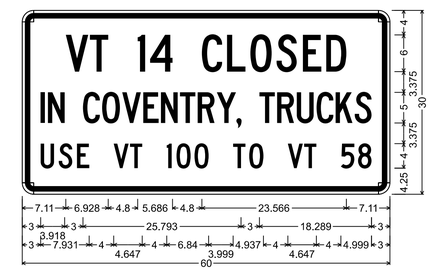

1.875" Radius, 0.750" Border, 0.500" Indent, Black on White;
"VT 14 CLOSED", C 80% spacing;
"IN COVENTRY, TRUCKS", C specified length;
"USE VT 100 TO VT 58", C specified length;

PLACE AT INTERSECTIONS OF VT 101/VT 100, VT 100/VT 105

PCMS

MESSAGES FOR PORTABLE CHANGEABLE MESSAGE SIGNS (PCMS)

MESSAGE 1	MESSAGE 2
VT 14	****DATE****
ROAD	**THRU**
CLOSED	****DATE****

SEE CONTRACT DOCUMENTS FOR CLOSURE DATES.

LOCATIONS ARE ON THIS SHEET AND REGIONAL DETOUR DETAILS SHEET.

DETOUR ROUTE SIGNS

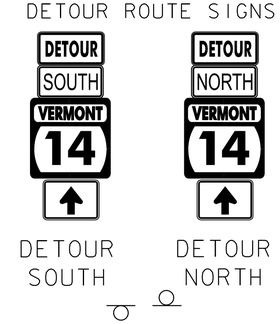

DETOUR ROUTE

DETOUR ROUTE SIGNS

ALL SIGNS SHOWN ON THIS SHEET OTHER THAN PCMS WILL BE INCLUDED IN ITEM 641.11 "TRAFFIC CONTROL, ALL-INCLUSIVE". PCMS WILL BE PAID UNDER ITEM 641.15 "PORTABLE CHANGEABLE MESSAGE SIGN".

PROJECT NAME: COVENTRY
PROJECT NUMBER: BF 025I(49)

FILE NAME: s2lb025detour.dgn
PROJECT LEADER: R. KLINEFELTER
DESIGNED BY: S. COLEY
REGIONAL DETOUR

PLOT DATE: 21-NOV-2023
DRAWN BY: C. MOONEY
CHECKED BY: R. KLINEFELTER
SHEET 18 OF 34

DETAIL B

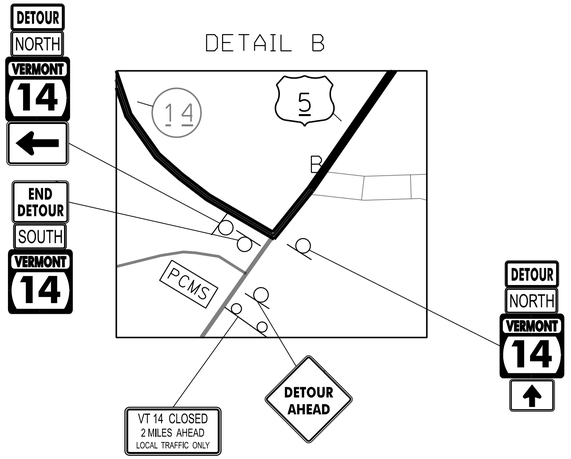

DETAIL A

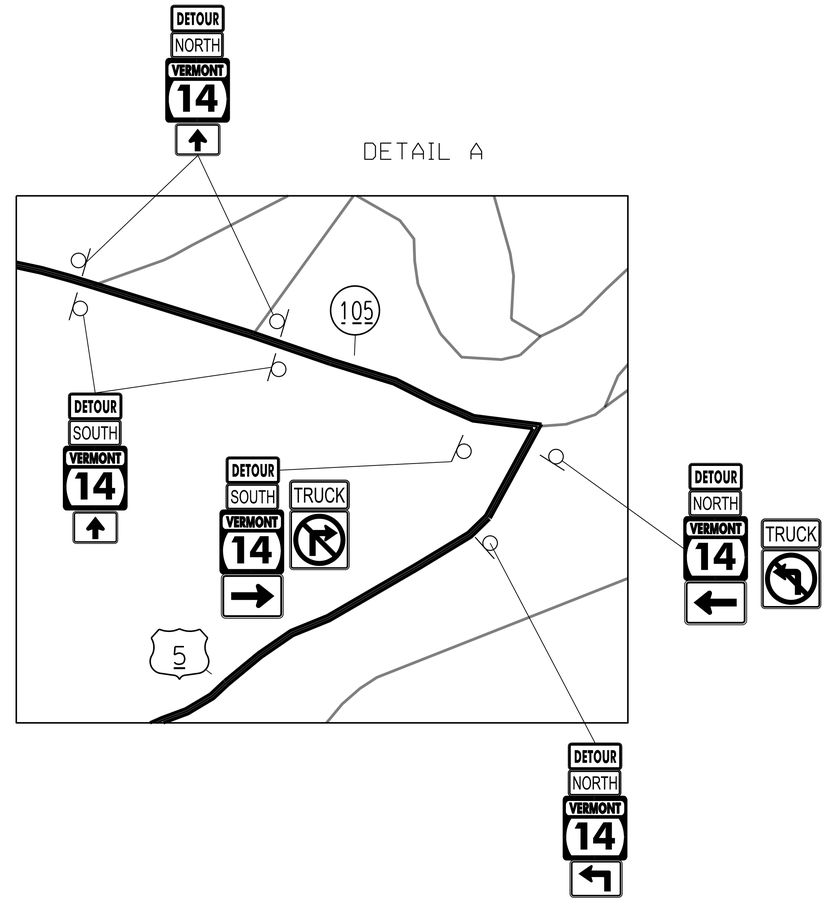

DETAIL C

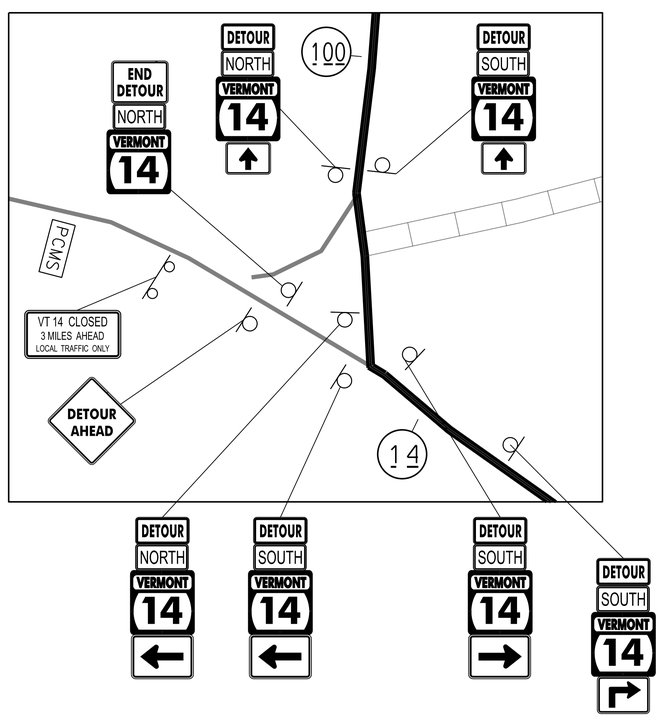

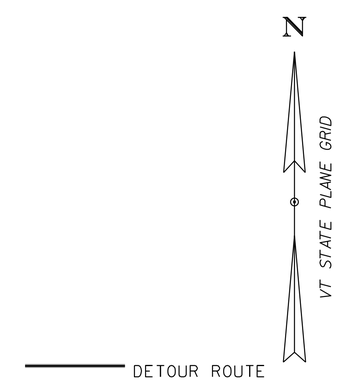

DETOUR ROUTE

DETOUR ROUTE SIGNS

ALL SIGNS SHOWN ON THIS SHEET OTHER THAN PCMS WILL BE INCLUDED IN ITEM 641.11 "TRAFFIC CONTROL, ALL-INCLUSIVE". PCMS WILL BE PAID UNDER ITEM 641.15 "PORTABLE CHANGEABLE MESSAGE SIGN".

PROJECT NAME: COVENTRY	
PROJECT NUMBER: BF 0251(49)	
FILE NAME: s21b025detour.dgn	PLOT DATE: 21-NOV-2023
PROJECT LEADER: R. KLINEFELTER	DRAWN BY: C. MOONEY
DESIGNED BY: S. COLEY	CHECKED BY: R. KLINEFELTER
REGIONAL DETOUR DETAILS	SHEET 19 OF 34

SOIL CLASSIFICATION

AASHTO

A1	Gravel and Sand
A3	Fine Sand
A2	Silty or Clayey Gravel and Sand
A4	Silty Soil - Low Compressibility
A5	Silty Soil - Highly Compressible
A6	Clayey Soil - Low Compressibility
A7	Clayey Soil - Highly Compressible

ROCK QUALITY DESIGNATION

R.Q.D. (%)	ROCK DESCRIPTION
<25	Very Poor
25 to 50	Poor
51 to 75	Fair
76 to 90	Good
>90	Excellent

SHEAR STRENGTH

UNDRAINED SHEAR STRENGTH IN P.S.F.	CONSISTENCY
<250	Very Soft
250-500	Soft
500-1000	Med. Stiff
1000-2000	Stiff
2000-4000	Very Stiff
>4000	Hard

CORRELATION GUIDE OF "N" TO DENSITY/CONSISTENCY

DENSITY (GRANULAR SOILS)

N	DESCRIPTIVE TERM
<5	Very Loose
5-10	Loose
11-24	Med. Dense
25-50	Dense
>50	Very Dense

CONSISTENCY (COHESIVE SOILS)

N	DESCRIPTIVE TERM
<2	Very Soft
2-4	Soft
5-8	Med. Stiff
9-15	Stiff
16-30	Very Stiff
31-60	Hard
>60	Very Hard

COMMONLY USED SYMBOLS

▼	Water Elevation
⊗	Standard Penetration Boring
⊕	Auger Boring
⊙	Rod Sounding
S	Sample
N	Standard Penetration Test Blow Count Per Foot For: 2" O.D. Sampler 1 3/8" I.D. Sampler Hammer Weight Of 140 Lbs. Hammer Fall Of 30"
VS	Field Vane Shear Test
US	Undisturbed Soil Sample
B	Blast
DC	Diamond Core
MD	Mud Drill
WA	Wash Ahead
HSA	Hollow Stem Auger
AX	Core Size 1 1/8"
BX	Core Size 1 5/8"
NX	Core Size 2 1/8"
M	Double Tube Core Barrel Used
LL	Liquid Limit
PL	Plastic Limit
PI	Plasticity Index
NP	Non Plastic
w	Moisture Content (Dry Wgt. Basis)
D	Dry
M	Moist
MTW	Moist To Wet
W	Wet
Sat	Saturated
Bo	Boulder
Gr	Gravel
Sa	Sand
Si	Silt
Cl	Clay
HP	Hardpan
Le	Ledge
NLTD	No Ledge To Depth
CNPF	Can Not Penetrate Further
TLOB	Top of Ledge Or Boulder
NR	No Recovery
Rec.	Recovery
%Rec.	Percent Recovery
RQD	Rock Quality Designation
CBR	California Bearing Ratio
<	Less Than
>	Greater Than
R	Refusal (N > 100)
VTSPG	NAD83 - See Note 7

COLOR

blk	Black	pnk	Pink
bl	Blue	pu	Purple
brn	Brown	rd	Red
dk	Dark	tn	Tan
gry	Gray	wh	White
gn	Green	yel	Yellow
lt	Light	mltc	Multicolored
or	Orange		

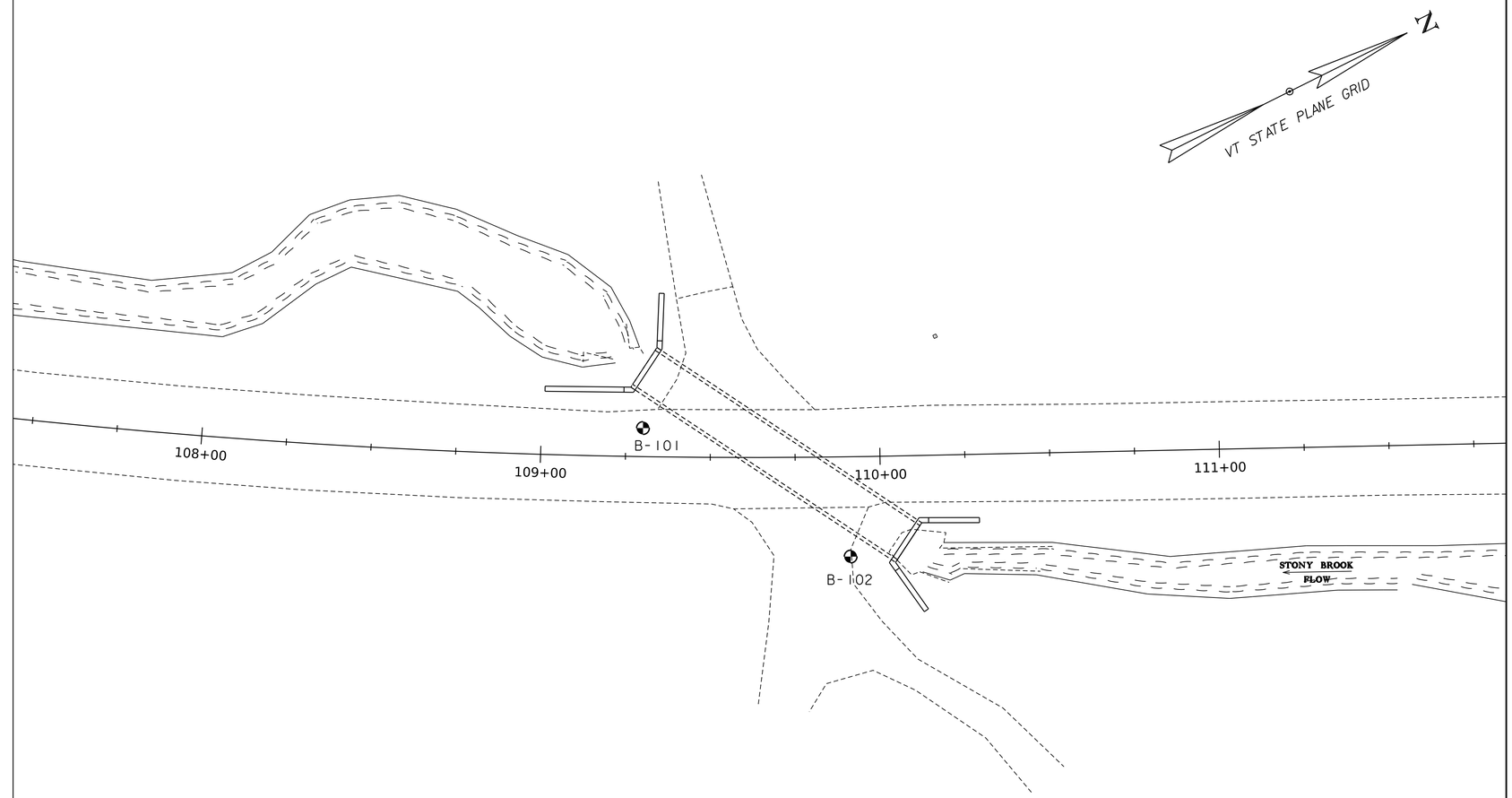

SCALE 1" = 20'-0"
20 0 20

DEFINITIONS (AASHTO)

BEDROCK (LEDGE) - Rock in its native location of indefinite thickness.

BOULDER - A rock fragment with an average dimension > 12 inches.

COBBLE - Rock fragments with an average dimension between 3 and 12 inches.

GRAVEL - Rounded particles of rock < 3" and > 0.0787" (#10 sieve).

SAND - Particles of rock < 0.0787" (#10 sieve) and > 0.0029" (#200 sieve).

SILT - Soil < 0.0029" (#200 sieve), non or slightly plastic and exhibits no strength when air-dried.

CLAY - Fine grained soil, exhibits plasticity when moist and considerable strength when air-dried.

VARVED - Alternate layers of silt and clay.

HARDPAN - Extremely dense soil, cemented layer, not softened when wet.

MUCK - Soft organic soil (containing > 10% organic material.

MOISTURE CONTENT - Weight of water divided by dry weight of soil.

FLOWING SAND - Granular soil so saturated (loose) that it flows into drill casing during extraction of wash rod.

STRIKE - Angle from magnetic north to line of intersection of bed with a horizontal plane.

DIP - Inclination of bed with a horizontal plane.

GENERAL NOTES

1. The subsurface explorations shown herein were made between 6/14/2021 and 6/15/2021 by the Agency.
2. Soil and rock classifications, properties and descriptions are based on engineering interpretation from available subsurface information by the Agency and may not necessarily reflect actual variations in subsurface conditions that may be encountered between individual boring or sample locations.
3. Observed water levels and/or conditions indicated are as recorded at the time of exploration and may vary according to the prevailing rainfall, methods of exploration and other factors.
4. Engineering judgment was exercised in preparing the subsurface information presented herein. Analysis and interpretation of subsurface data was performed and interpreted for Agency design and estimating purposes. Presentation of the information in the Contract is intended to provide the Contractor access to the same data available to the Agency. The subsurface information is presented in good faith and is not intended as a substitute for personal investigation, independent interpretation, independent analysis or judgment by the Contractor.
5. Pictorial structure details shown on the boring plan layout or soils profile are for illustrative purposes only and may not accurately portray final contract details.
6. Terminology used on boring logs to describe the hardness, degree of weathering, and spacing of fractures, joints and other discontinuities in the bedrock is defined in the AASHTO Manual on Subsurface Investigations, 1988.
7. Northing and Easting coordinates are shown in Vermont State Plane Grid North American Datum 1983 in meters and survey feet.

BORING CHART

HOLE NO.	SURV. STATION	OFFSET	NORTHING	EASTING
B-101	109+30.05	8.42' LT	1702928.16	872327.29
B-102	109+90.95	29.39' RT	1702988.24	872366.86

PROJECT NAME: COVENTRY
PROJECT NUMBER: BF 0251(49)

FILE NAME: s21b025bor.dgn
PROJECT LEADER: R. KLINEFELTER
DESIGNED BY: S. COLEY
BORING INFORMATION SHEET

PLOT DATE: 21-NOV-2023
DRAWN BY: S. COLEY
CHECKED BY: R. KLINEFELTER
SHEET 20 OF 34

STATE OF VERMONT
AGENCY OF TRANSPORTATION
CONSTRUCTION AND
MATERIALS BUREAU
CENTRAL LABORATORY

BORING LOG

Coventry
BF 0251(49)
VT 14 Bridge No. 132

Boring No.: **B-101**
Page No.: 1 of 1
Pin No.: 21b025
Checked By: AJA

Boring Crew: Judkins, Arles, Emerson, Brochu
Date Started: 6/14/21 Date Finished: 6/14/21
VTSPG NAD83: N 872327.29 ft E 1702928.16 ft
Station: 109+26 Offset: 8.4 LT
Ground Elevation: 788.7 ft

	Casing	Sampler
Type:	WASH BORE	SS
I.D.:	4 in	1.5 in
Hammer Wt:	N.A.	140 lb.
Hammer Fall:	N.A.	30 in.
Hammer/Rod Type:	Auto/AWJ	
Rig:	CME 55 TRACK	C_E = 1.52

Groundwater Observations

Date	Depth (ft)	Notes
06/14/21	5.1	WT After Drilling

Depth (ft)	Strata (1)	CLASSIFICATION OF MATERIALS (Description)	Blows/6" (N Value)	Moisture Content %	Gravel %	Sand %	Fines %
		Field Note, Asphalt 0.0'-0.2'					
		Visual Description:, SaGr, brn, Moist, Rec. = 0.5 ft, Field Note: NXDC Cleanout 1.3'-2.0'. Rock in end of sampler	12-10-16 (22)				
		Visual Description:, SaGr, brn, Moist, Rec. = 0.6 ft, Field Note: NXDC Cleanout 3.0'-4.0'. Rock in end of sampler	20-15-18-12 (33)				
5		A-1-b, SaGr, brn, Moist, Rec. = 0.8 ft, Field Note: NXDC Cleanout 5.1'-6.0'	11-10-16-12 (26)	8.6	46.9	39.2	13.9
		Visual Description:, SaGr, brn, Moist, Rec. = 0.6 ft, Field Note: NXDC Cleanout 7.2'-8.0'	8-9-8-12 (17)				
		A-1-b, SaGr, brn, Moist, Rec. = 0.5 ft, Field Note: NXDC Cleanout 9.1'-10.0'	21-10-17-19 (27)	10.3	53.2	43.6	3.2
10		Visual Description:, Gr, brn, Moist, Rec. = 0.4 ft, Field Note: Refusal @ 11.9' 100 blows. NXDC Cleanout 10.9'-12.0'. Rock in end of sampler	28-30-27-R@5" (57)				
		A-1-b, GrSa, brn, Moist, Rec. = 0.8 ft, Field Note: Refusal @ 13.6' 100 blows. NXDC Cleanout 12.9'-14.0'	30-31-28-R@1" (59)	12.1	52.9	47.1	0.0
15		A-1-a, SaGr, brn, Moist, Rec. = 0.8 ft, Field Note: NXDC Cleanout 18.9'-20.0'	18-26-5-13 (31)	7.6	59.6	29.9	10.5
20		Field Note, No Recovery, NXDC Cleanout 4.2'-25.0'					
25		A-1-b, SaGr, brn, Moist, Rec. = 0.8 ft	14-16-16-18 (32)	9.3	48.8	41.2	10.0
		Hole stopped @ 27.0 ft					
30		Remarks: Hole Collapsed @ 5.8'.					

Notes:
1. Stratification lines represent approximate boundary between material types. Transition may be gradual.
2. N Values have not been corrected for hammer energy. C_E is the hammer energy correction factor.
3. Water level readings have been made at times and under conditions stated. Fluctuations may occur due to other factors than those present at the time measurements were made.

BORING LOG COVENTRY BF 0251(49).GPJ VERMONT AOT.GDT 9/13/21

STATE OF VERMONT
AGENCY OF TRANSPORTATION
CONSTRUCTION AND
MATERIALS BUREAU
CENTRAL LABORATORY

BORING LOG

Coventry
BF 0251(49)
VT 14 Bridge No. 132

Boring No.: **B-102**
Page No.: 1 of 1
Pin No.: 21b025
Checked By: AJA

Boring Crew: Judkins, Arles, Emerson
Date Started: 6/15/21 Date Finished: 6/15/21
VTSPG NAD83: N 872366.86 ft E 1702988.24 ft
Station: 109+87 Offset: 29.2 RT
Ground Elevation: 789.05 ft

	Casing	Sampler
Type:	WASH BORE	SS
I.D.:	4 in	1.5 in
Hammer Wt:	N.A.	140 lb.
Hammer Fall:	N.A.	30 in.
Hammer/Rod Type:	Auto/AWJ	
Rig:	CME 55 TRACK	C_E = 1.52

Groundwater Observations

Date	Depth (ft)	Notes
06/15/21	7.3	WT After Drilling

Depth (ft)	Strata (1)	CLASSIFICATION OF MATERIALS (Description)	Blows/6" (N Value)	Moisture Content %	Gravel %	Sand %	Fines %
		Visual Description:, Sa, brn, Dry, Rec. = 0.7 ft	4-7-8-9 (15)				
		Visual Description:, GrSa, brn, Dry, Rec. = 0.8 ft, Field Note: NXDC Cleanout 2.8'-4.0'	14-14-8-7 (22)				
5		A-1-b, SaGr, brn, Moist, Rec. = 0.6 ft, Field Note: NXDC Cleanout 5.0'-6.0'	8-10-15-19 (25)	9.3	44.7	40.9	14.4
		Field Note, No Recovery, NXDC Cleanout 7.0'-8.0'. Rock in end of sampler	14-12-15-18 (27)				
		Field Note, No Recovery, Refusal @ 8.4'. NXDC Cleanout 8.4'-10.0'. Cobbles and Boulders 8.4'-10.0'. Rock in end of sampler	R@5" (R)				
10		Visual Description:, SaGr, brn, Moist, Rec. = 0.3 ft, Field Note: Refusal @ 10.4' 100 blows no movement. NXDC Cleanout 10.3'-12.0'. Rock in end of sampler	R@5" (R)				
		A-1-b, GrSa, brn, Moist, Rec. = 0.6 ft, Field Note: NXDC Cleanout 13.0'-14.0'	24-13-7-8 (20)	13.0	40.5	53.4	6.1
15		A-1-b, SaGr, brn, Moist, Rec. = 0.5 ft, Field Note: NXDC Cleanout 19.1'-20.0'	8-12-15-12 (27)	10.1	49.0	40.4	10.6
20		A-1-b, SaGr, brn, Moist, Rec. = 0.9 ft, Field Note: NXDC Cleanout 23.7'-25.0'	9-14-13-19 (27)	9.6	49.1	41.0	9.9
25		A-1-b, SaGr, brn, Moist, Rec. = 0.5 ft	23-24-20-20 (44)	11.3	45.7	40.7	13.6
		Hole stopped @ 27.0 ft					
30		Remarks: Hole Collapsed @ 7.2'					

Notes:
1. Stratification lines represent approximate boundary between material types. Transition may be gradual.
2. N Values have not been corrected for hammer energy. C_E is the hammer energy correction factor.
3. Water level readings have been made at times and under conditions stated. Fluctuations may occur due to other factors than those present at the time measurements were made.

BORING LOG COVENTRY BF 0251(49).GPJ VERMONT AOT.GDT 9/13/21

PROJECT NAME: COVENTRY
PROJECT NUMBER: BF 0251(49)

FILE NAME: s21b025bor.dgn
PROJECT LEADER: R. KLINEFELTER
DESIGNED BY: S. COLEY
BORING LOGS

PLOT DATE: 21-NOV-2023
DRAWN BY: S. COLEY
CHECKED BY: R. KLINEFELTER
SHEET 21 OF 34

REMOVAL AND DISPOSAL OF GUARDRAIL
STA 108+47.5 TO 109+40.4 LT
STA 109+97.5 TO 112+00.0 RT

STEEL BEAM GUARDRAIL, GALVANIZED
STA 106+16.6 TO 109+42.0 LT
STA 109+90.9 TO 112+00.0 RT

ANCHOR FOR STEEL BEAM RAIL
STA 106+28.6 LT (14.25 FT)
STA 109+39.1 LT (20.66 FT)
STA 109+92.2 RT (37.31 FT)

MOMENT SLAB
STA 109+33.5 LT
STA 109+38.3 LT
STA 109+41.3 LT
STA 109+93.3 RT
STA 109+97.6 RT
STA 110+03.3 RT

DELINEATOR WITH STEEL POST
STA 106+26.8 LT (GREEN)
STA 109+29.3 LT (BLUE)
STA 110+08.9 RT (GREEN)

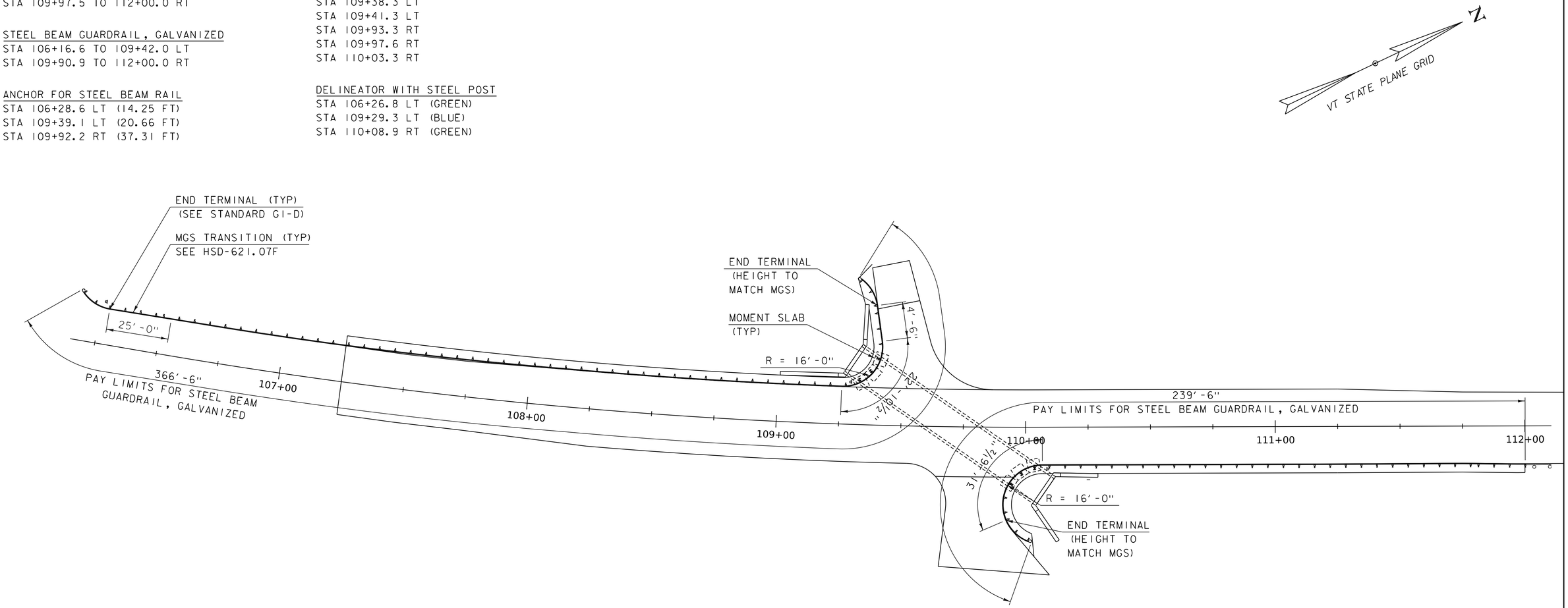

SCALE 1" = 20'-0"
20 0 20

PROJECT NAME: COVENTRY	
PROJECT NUMBER: BF 0251(49)	
FILE NAME: s21b025bdr_rail.dgn	PLOT DATE: 21-NOV-2023
PROJECT LEADER: R. KLINEFELTER	DRAWN BY: S. COLEY
DESIGNED BY: S. COLEY	CHECKED BY: R. KLINEFELTER
RAIL LAYOUT SHEET	SHEET 22 OF 34

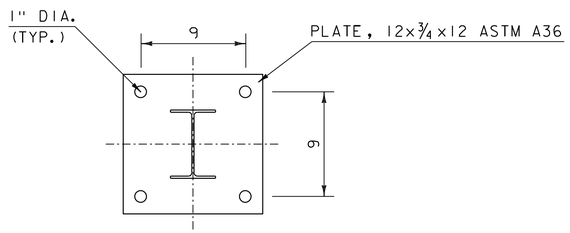

POST PLAN

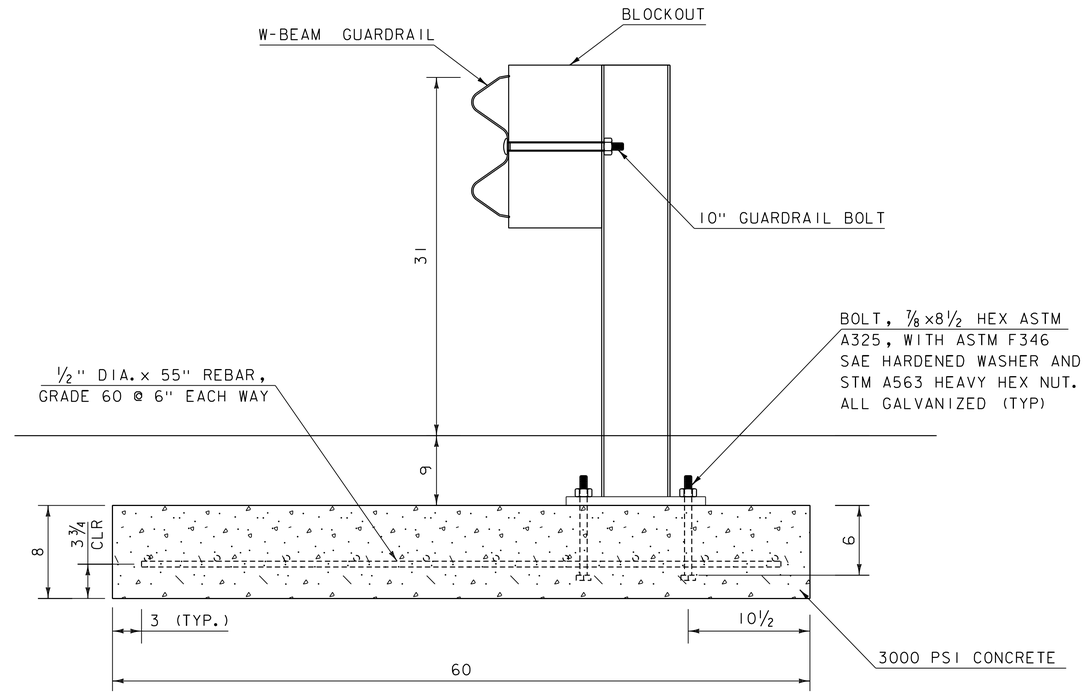

SLAB SECTION

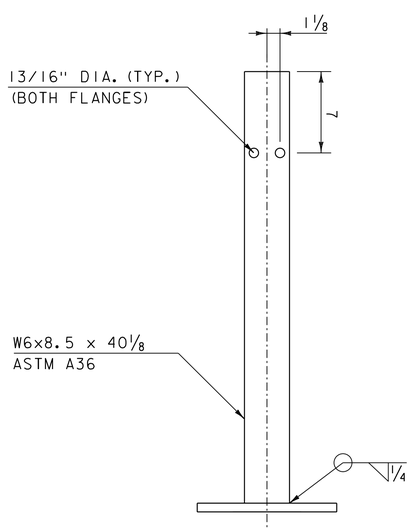

POST ELEVATION

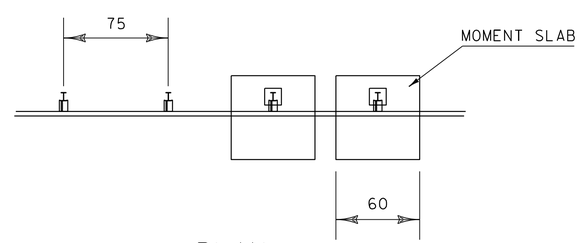

PLAN

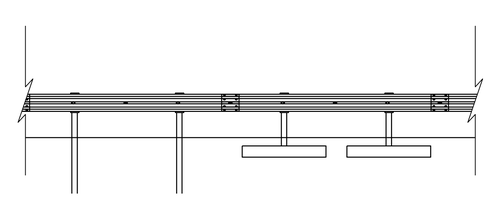

ELEVATION

GENERAL NOTES

1. DESIGNATIONS ARE AS IDENTIFIED IN "A GUIDE TO STANDARDIZED HIGHWAY BARRIER HARDWARE" AS PUBLISHED BY THE "AMERICAN ASSOCIATION OF STATE AND HIGHWAY TRANSPORTATION OFFICIALS" (AASHTO), "ASSOCIATED GENERAL CONTRACTORS OF AMERICA" (AGC) AND THE "AMERICAN ROAD AND TRANSPORTATION BUILDERS ASSOCIATION" (ARTBA).
2. MATERIALS SHALL BE IN ACCORDANCE WITH SECTION 728.
3. ITEM 543.10 CONTRACTOR FABRICATED PRECAST CONCRETE STRUCTURE (MOMENT SLAB) INCLUDES ALL PRECAST CONCRETE COMPONENTS INCLUDING REINFORCING STEEL, ANCHOR BOLTS, WASHERS, AND HEX NUTS.
4. GUARDRAIL POSTS PLATES, BLOCKOUTS, AND CONNECTION HARDWARE SHALL BE INCLUDED UNDER ITEM 621.20.
5. THE DYNAMIC DEFLECTION DISTANCE OF 27 INCHES FOR THE MOMENT SLAB SHALL BE MAINTAINED CLEAR OF OBSTACLES, TO BE MEASURED FROM THE BACK OF POST.
6. ALL DIMENSIONS IN INCHES, UNLESS OTHERWISE NOTED.
7. POST TO BE SET PLUMB WITH VERTICAL DIMENSIONS MEASURED AT THE FACE OF RAIL.
8. THE CONTRACTOR IS TO SUBMIT SHOP DRAWINGS FOR THE POST AND BASE PLATE FABRICATION IN ACCORDANCE WITH SECTION 105.

PROJECT NAME: COVENTRY	
PROJECT NUMBER: BF 0251(49)	
FILE NAME: s21b025rail_det.dgn	PLOT DATE: 21-NOV-2023
PROJECT LEADER: R. KLINEFELTER	DRAWN BY: C. MOONEY
DESIGNED BY: S. COLEY	CHECKED BY: R. KLINEFELTER
MOMENT SLAB	SHEET 23 OF 34

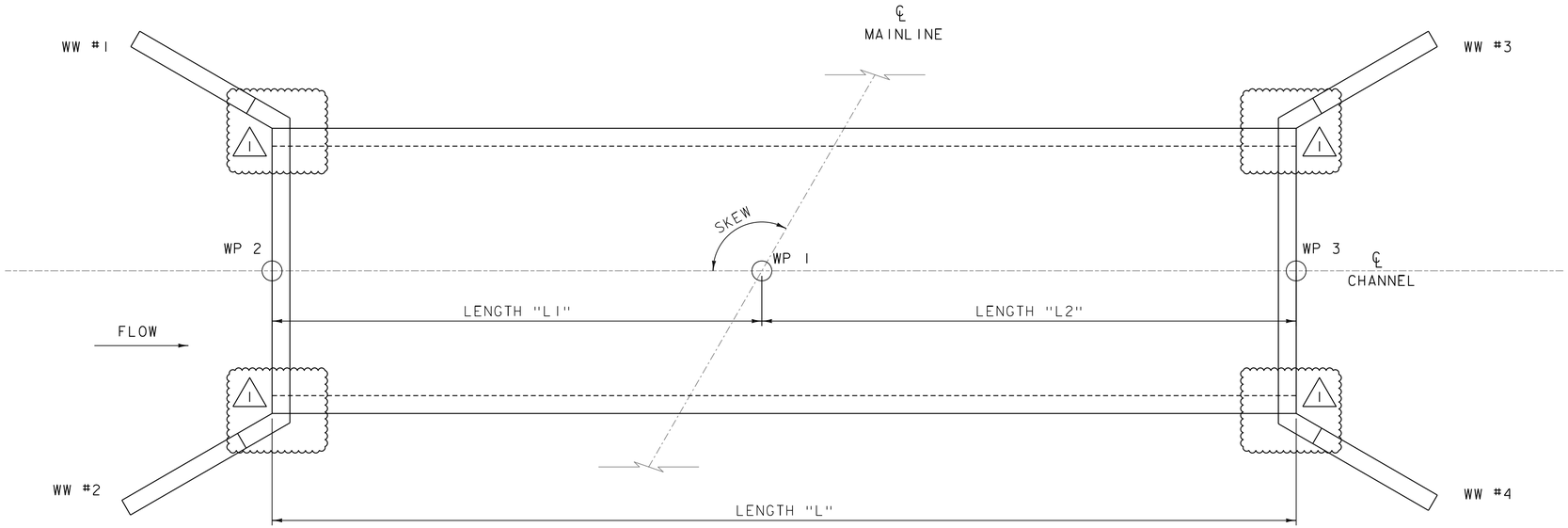

CULVERT PLAN VIEW

NOT TO SCALE

DESIGN INFORMATION

CULVERT SKEW	146.3°
LENGTH "L"	93'-6"
LENGTH "L1"	45'-5"
LENGTH "L2"	48'-1"

WORKING POINTS

	NORTHING	EASTING	STATION	OFFSET
WP 1	872384.10	1702991.69	110+07.93	25.57' RT
WP 2	872360.27	1702952.99	109+70.55	0.00'
WP 3	872335.05	1702912.06	109+30.04	26.30' LT

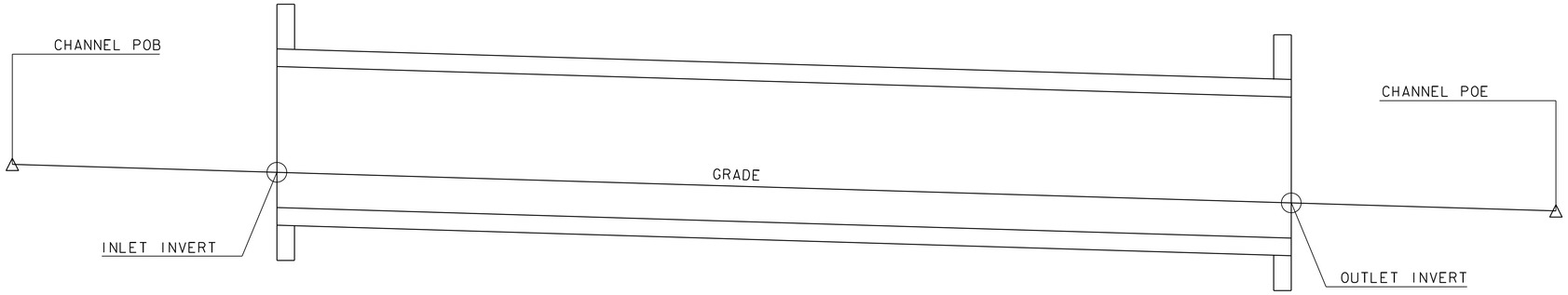

CULVERT ELEVATION VIEW

NOT TO SCALE

CHANNEL ALIGNMENT

	STATION	ELEVATION
CHANNEL POB	50+13.30	781.75
INLET INVERT	50+29.96	781.42
OUTLET INVERT	51+23.49	779.55
CHANNEL POE	51+64.30	778.73
GRADE	-0.020	

NOTES:

1. PLAN AND ELEVATION VIEWS ARE SCHEMATIC DRAWINGS USED TO REFERENCE INFORMATION PROVIDED IN THE TABLES. THESE VIEWS DO NOT DEPICT THE ACTUAL LAYOUT OF THE STRUCTURE.
2. SEE THE BOX CULVERT END DETAILS SHEET FOR MORE INFORMATION.

REVISION	PLOT DATE	DESCRIPTION	BY
1	11-30-2023	UPDATED WINGWALL LOCATIONS	CAM

PROJECT NAME: COVENTRY
PROJECT NUMBER: BF 0251(49)

FILE NAME: s2lb005culvert_det.dgn
PROJECT LEADER: R. KLINEFELTER
DESIGNED BY: S. COLEY
BOX CULVERT PLAN AND ELEVATION

PLOT DATE: 30-NOV-2023
DRAWN BY: S. COLEY
CHECKED BY: R. KLINEFELTER
SHEET 24 OF 34

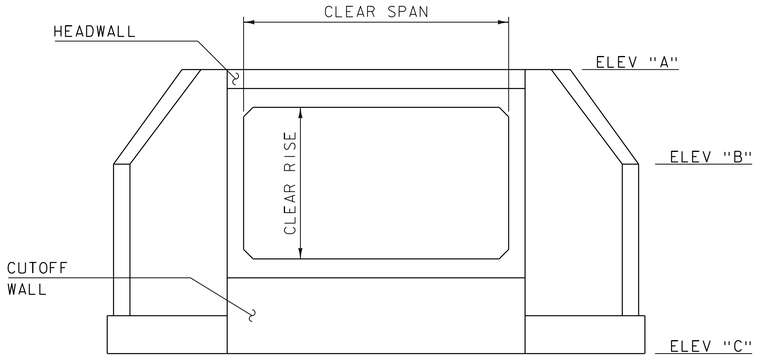

FLARED END SECTION
NOT TO SCALE

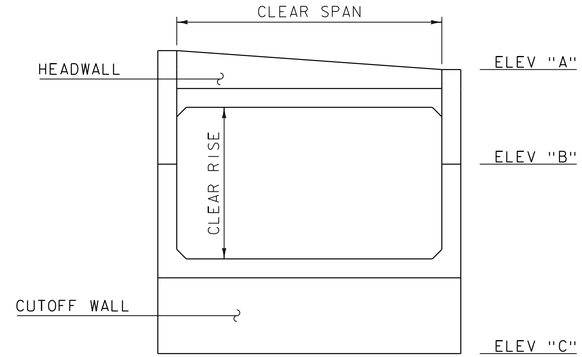

STRAIGHT END SECTION
NOT TO SCALE

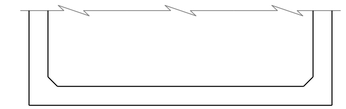

BOTTOM TYPE "A" - FLAT
NOT TO SCALE

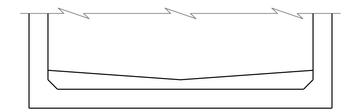

BOTTOM TYPE "B" - LOW FLOW BAFFLE
NOT TO SCALE

BOTTOM TYPE "C" - STANDARD BAFFLE
NOT TO SCALE

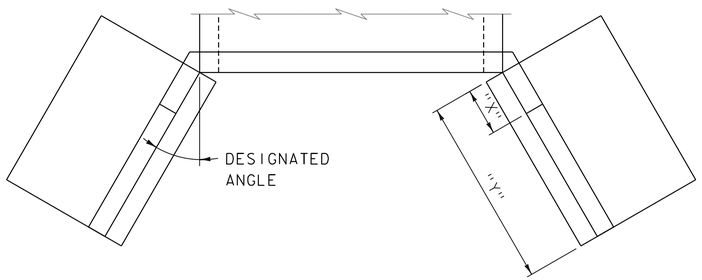

FLARED END PLAN
NOT TO SCALE

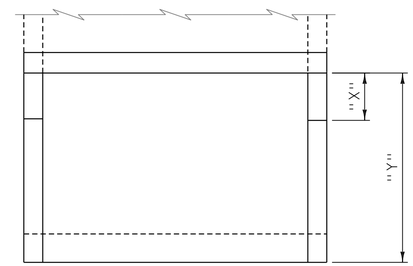

STRAIGHT END PLAN
NOT TO SCALE

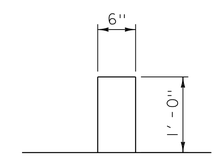

STANDARD BAFFLE
NOT TO SCALE

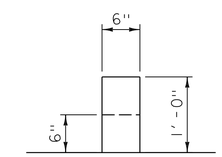

LOW FLOW BAFFLE
NOT TO SCALE

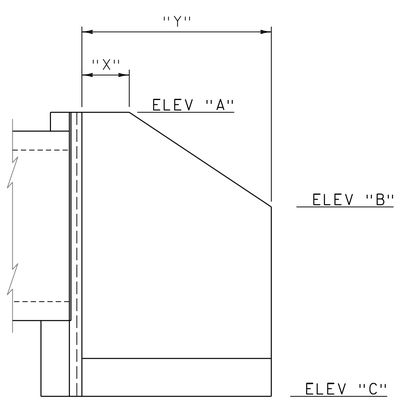

FLARED END ELEVATION
NOT TO SCALE

DESIGN INFORMATION

CLEAR SPAN	12'-0"
CLEAR RISE	8'-0"
END TYPE (INLET)	FLARED
END TYPE (OUTLET)	FLARED
BOTTOM TYPE	TYPE "C"
BOX CULVERT OPENING BEVEL	INLET
BOTTOM CUTOFF WALL ELEV (INLET)	776.42
BOTTOM CUTOFF WALL ELEV (OUTLET)	774.55

WINGWALL INFORMATION

LOCATION	ANGLE	ELEV "A"	ELEV "B"	ELEV "C"	DIM "X"	DIM "Y"
WW #1	21°	789.70	788.80	776.42	2'-0"	16'-9"
WW #2	34°	790.10	789.90	776.42	2'-0"	17'-0"
WW #3	33°	789.00	789.00	774.55	2'-0"	25'-3"
WW #4	59°	788.20	787.80	774.55	2'-0"	16'-0"

DIMENSIONS MEASURED ALONG FRONT FACE OF WINGWALL.

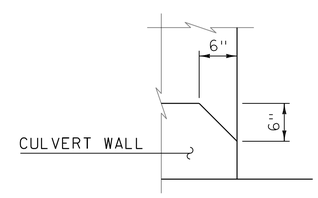

BOX CULVERT OPENING BEVEL DETAIL
(SEE NOTE 3)
NOT TO SCALE

NOTES:
1. SECTION, PLAN AND ELEVATION VIEWS ARE SCHEMATIC DRAWINGS USED TO REFERENCE INFORMATION PROVIDED IN THE TABLES. THESE VIEWS DO NOT DEPICT THE ACTUAL LAYOUT OF THE STRUCTURE.
2. SEE THE BOX CULVERT PLAN AND ELEVATION SHEET FOR MORE INFORMATION.
3. WHEN A BOX CULVERT OPENING BEVEL IS SPECIFIED, THE FULL PERIMETER OF THE OPENING SHALL BE BEVELED. A BEVEL IS NOT REQUIRED ALONG THE BOTTOM HORIZONTAL EDGE OF THE OPENING IF STONE FILL IS SPECIFIED INSIDE THE BOX.

PROJECT NAME: COVENTRY
PROJECT NUMBER: BF 025I(49)

FILE NAME: s2lb025culvert_det.dgn
PROJECT LEADER: R. KLINEFELTER
DESIGNED BY: S. COLEY
BOX CULVERT END DETAILS

PLOT DATE: 21-NOV-2023
DRAWN BY: S. COLEY
CHECKED BY: R. KLINEFELTER
SHEET 25 OF 34

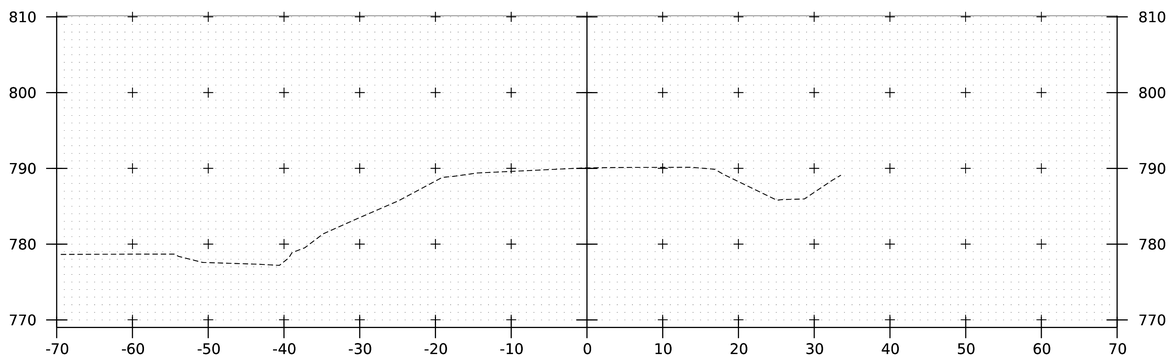

106+50

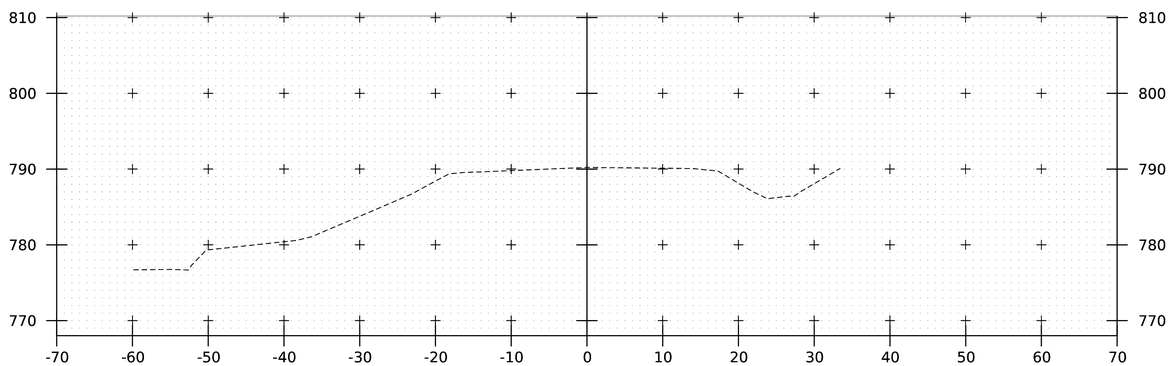

106+25

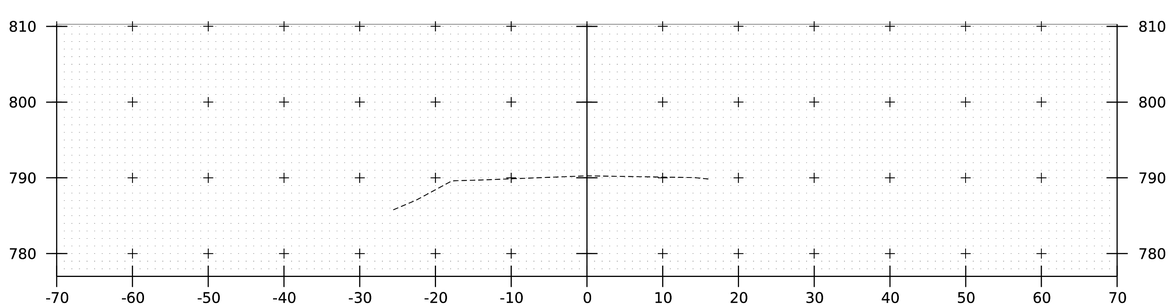

106+15

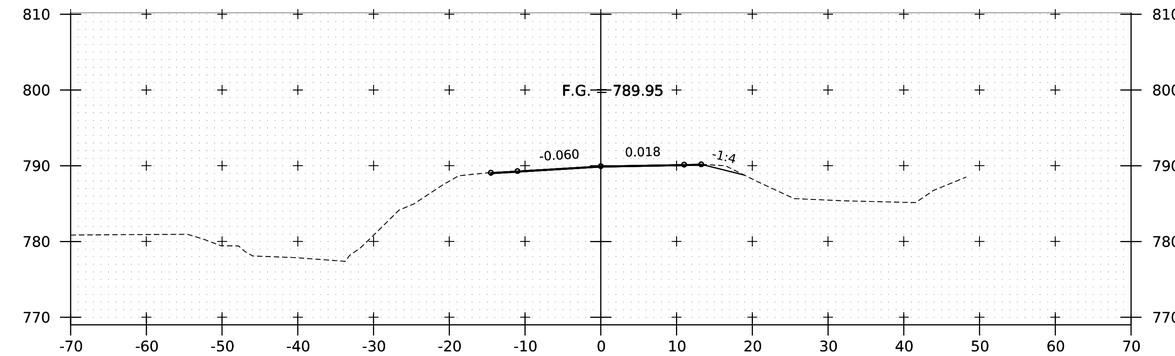

107+25

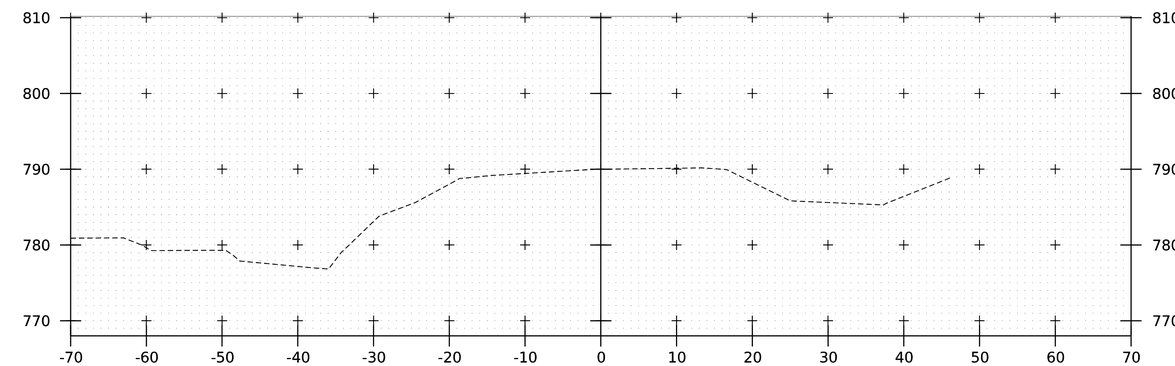

107+00

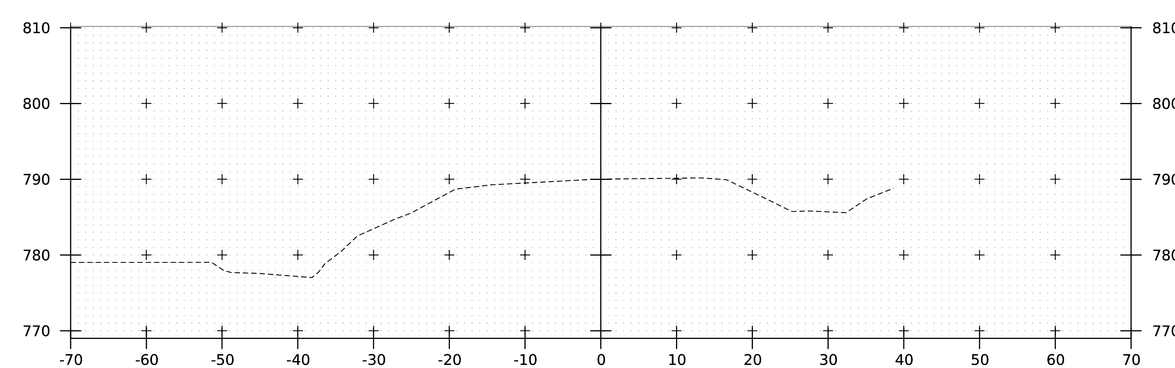

106+75

PROJECT NAME: COVENTRY	
PROJECT NUMBER: BF 025I(49)	
FILE NAME: s21b025mainlinexs.dgn	PLOT DATE: 21-NOV-2023
PROJECT LEADER: R. KLINEFELTER	DRAWN BY: S. COLEY
DESIGNED BY: S. COLEY	CHECKED BY: R. KLINEFELTER
VT 14 CROSS SECTIONS 1	SHEET 26 OF 34

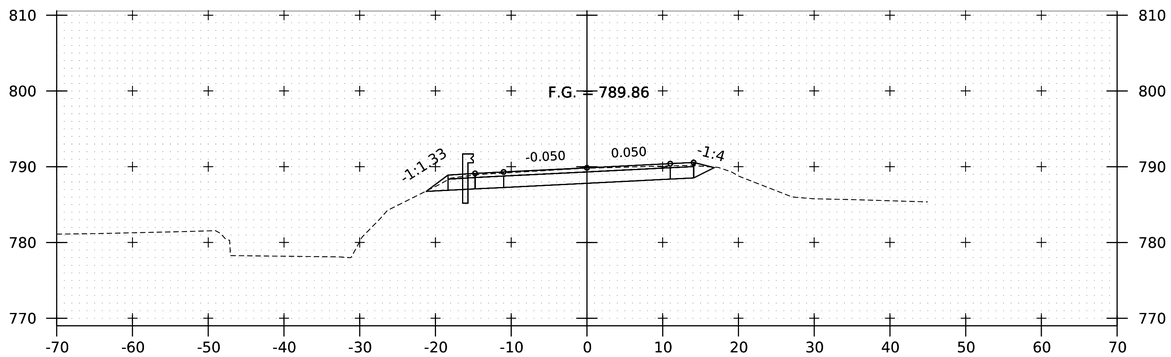

108+00

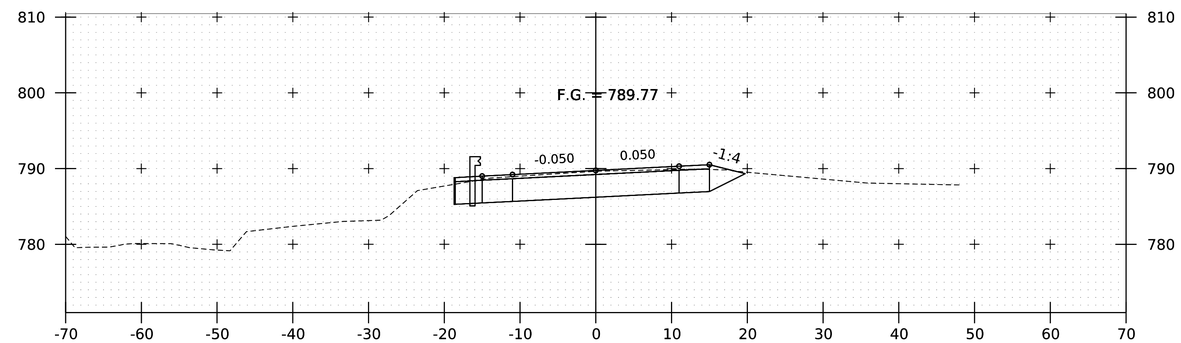

108+75

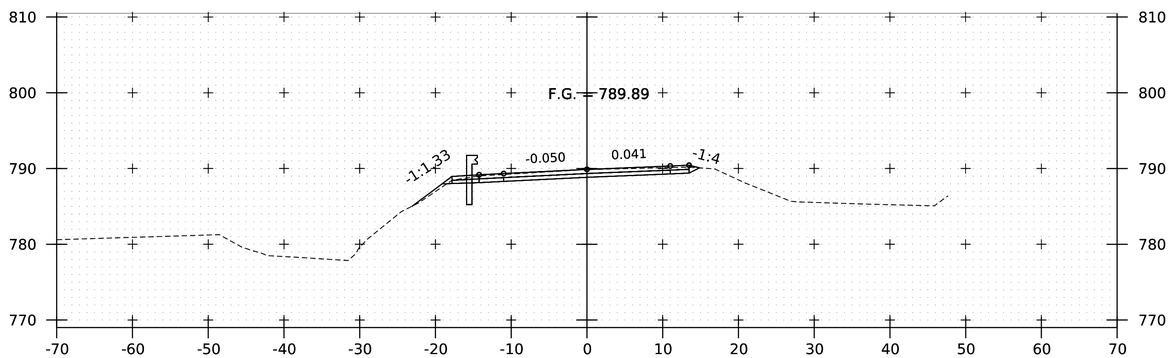

107+75

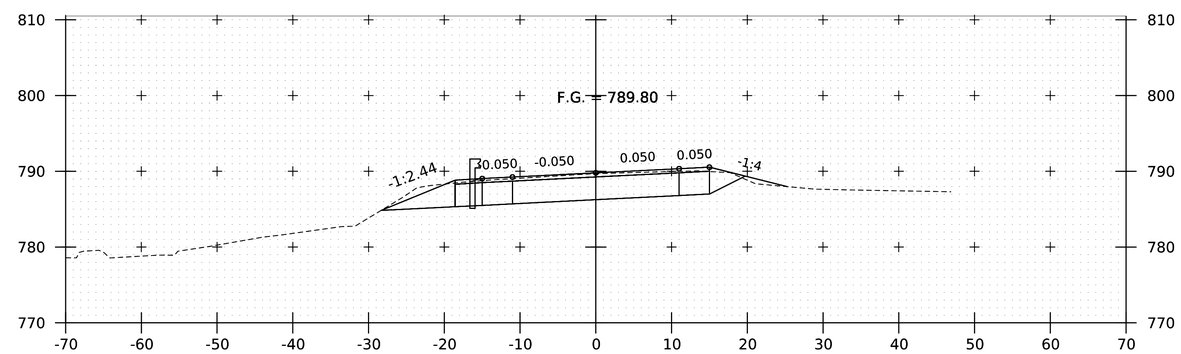

108+50

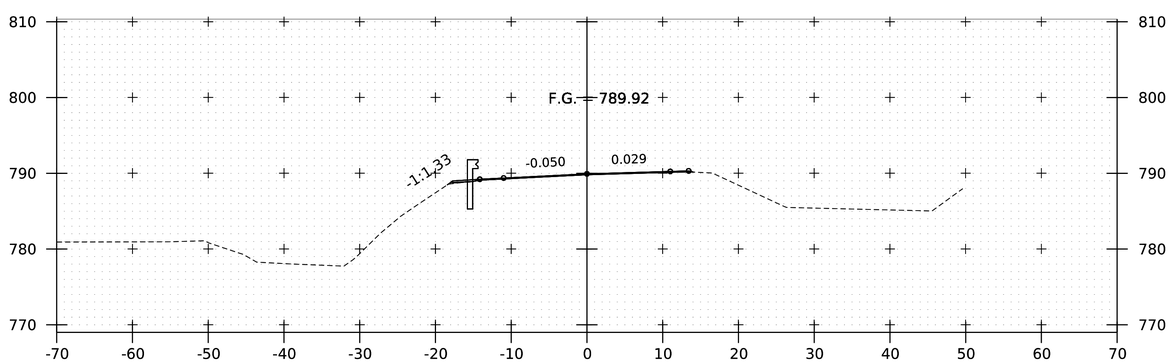

107+50

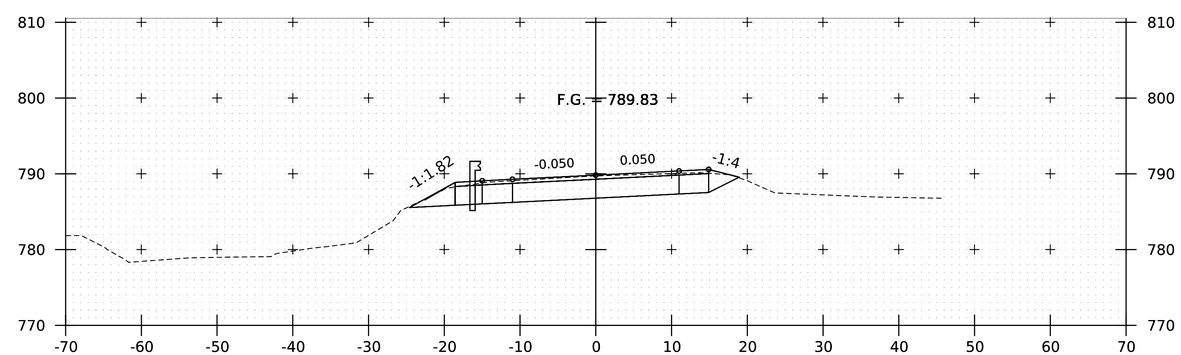

BEGIN PROJECT

108+25

PROJECT NAME: COVENTRY	
PROJECT NUMBER: BF 025I(49)	
FILE NAME: s2lb025mainlinexs.dgn	PLOT DATE: 21-NOV-2023
PROJECT LEADER: R. KLINEFELTER	DRAWN BY: S. COLEY
DESIGNED BY: S. COLEY	CHECKED BY: R. KLINEFELTER
VT 14 CROSS SECTIONS 2	SHEET 27 OF 34

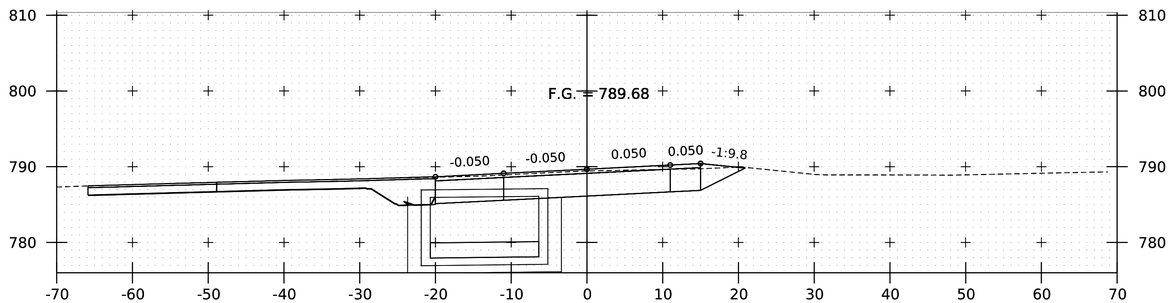

109+50

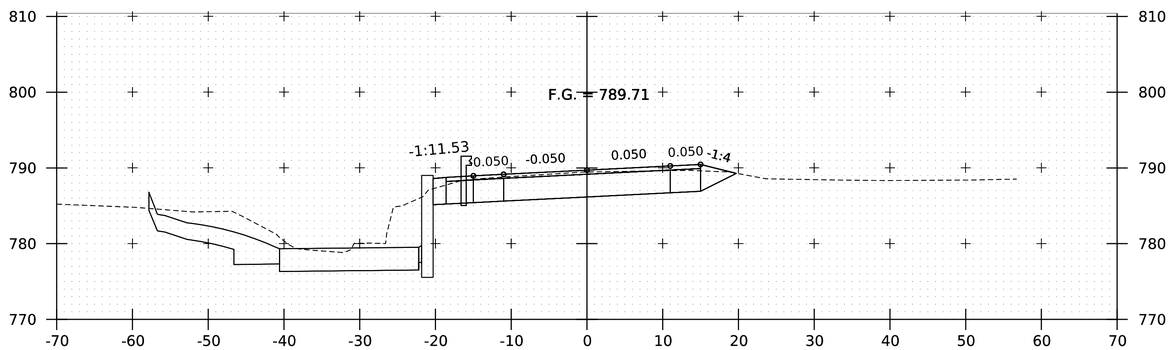

109+25

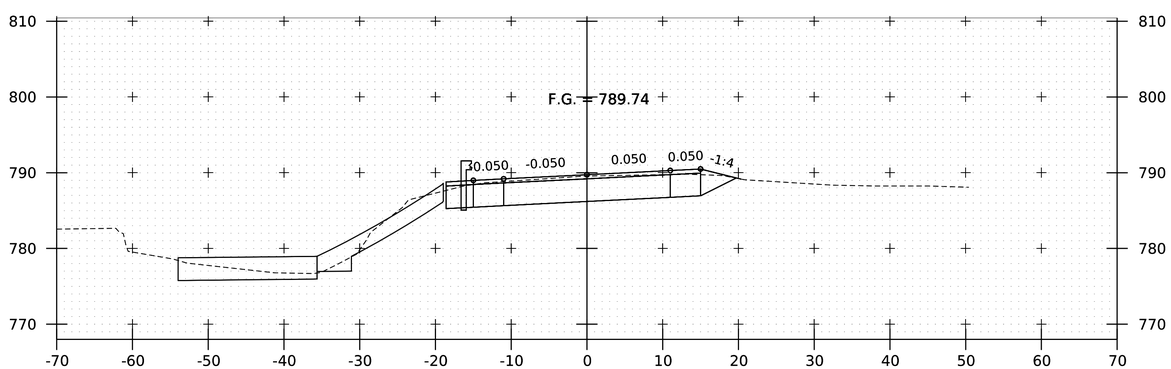

109+00

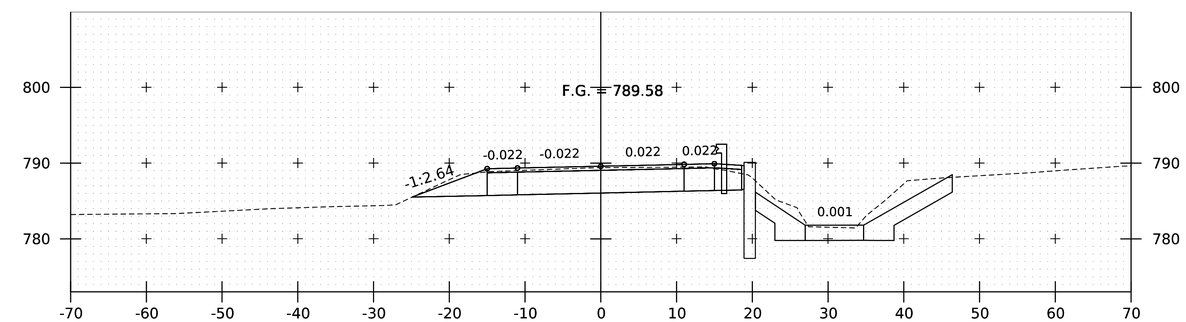

110+25

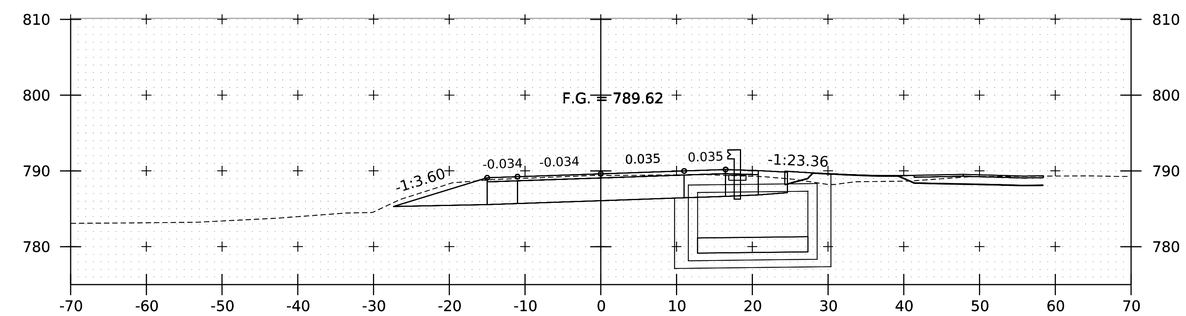

110+00

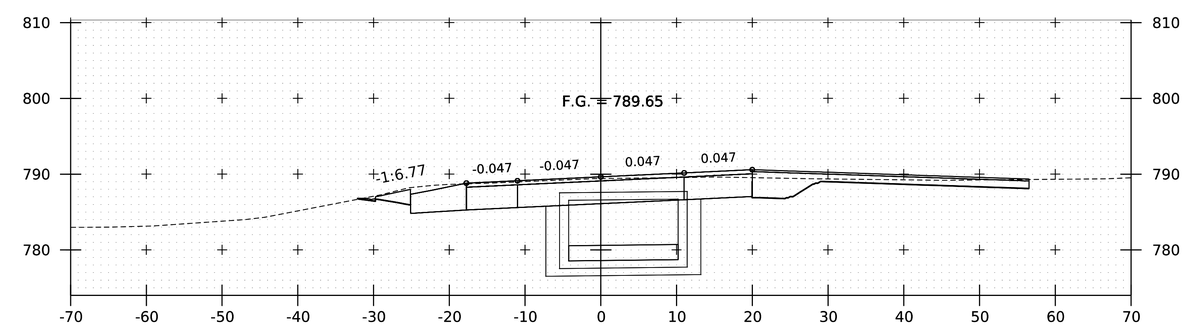

109+75

PROJECT NAME: COVENTRY	
PROJECT NUMBER: BF 025I(49)	
FILE NAME: s2lb025mainlinexs.dgn	PLOT DATE: 21-NOV-2023
PROJECT LEADER: R. KLINEFELTER	DRAWN BY: S. COLEY
DESIGNED BY: S. COLEY	CHECKED BY: R. KLINEFELTER
VT 14 CROSS SECTIONS 3	SHEET 28 OF 34

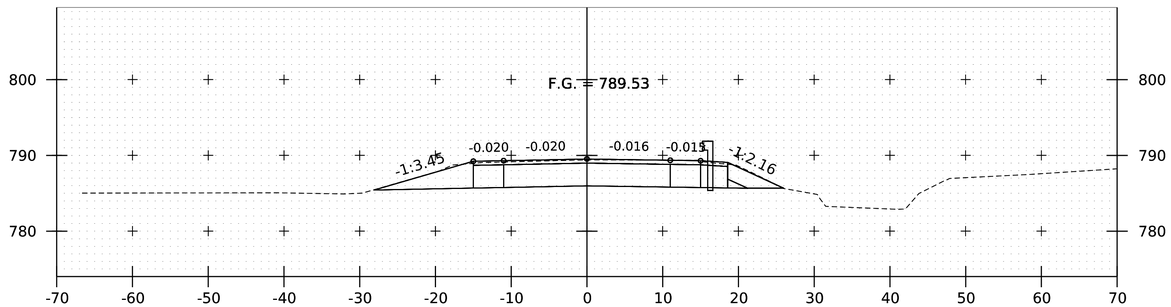

111+00

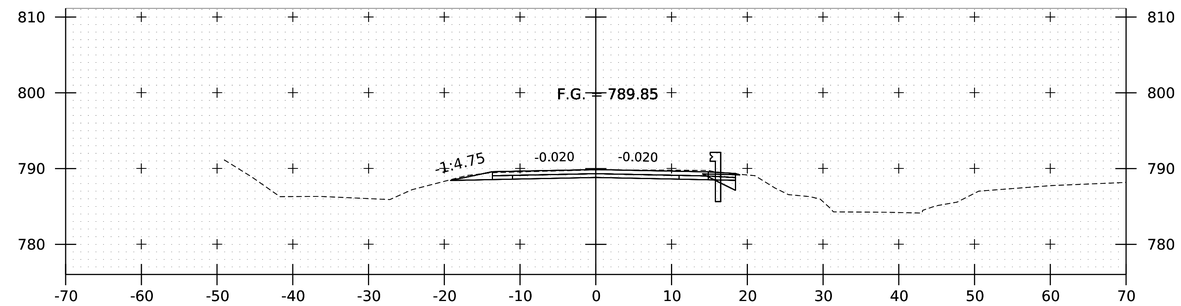

111+75

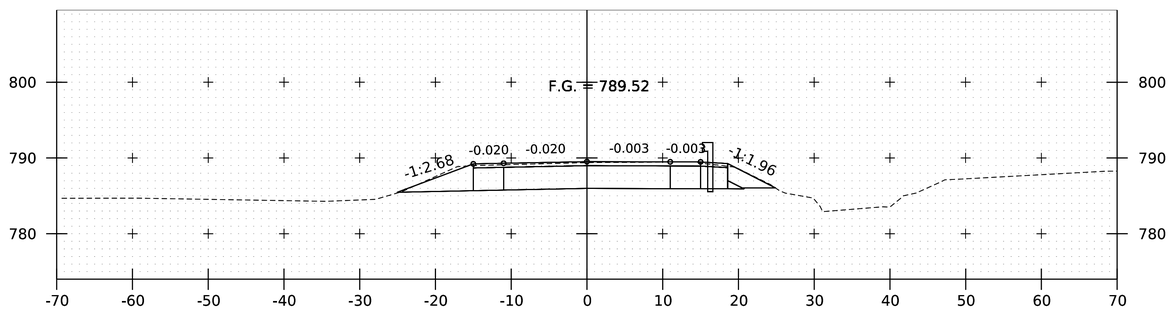

110+75

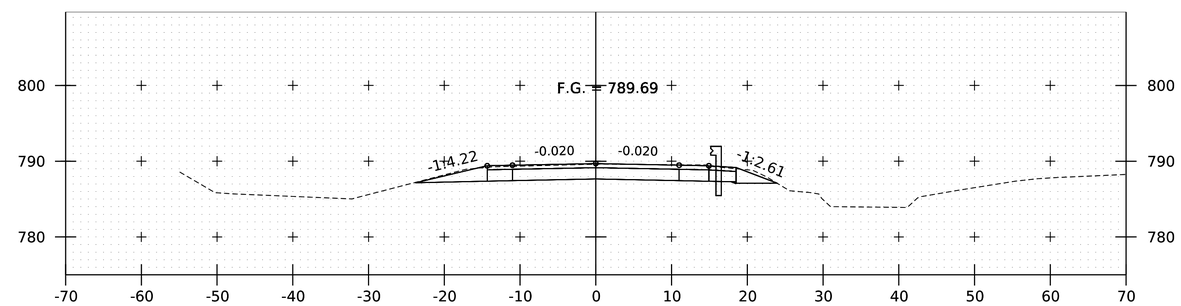

111+50

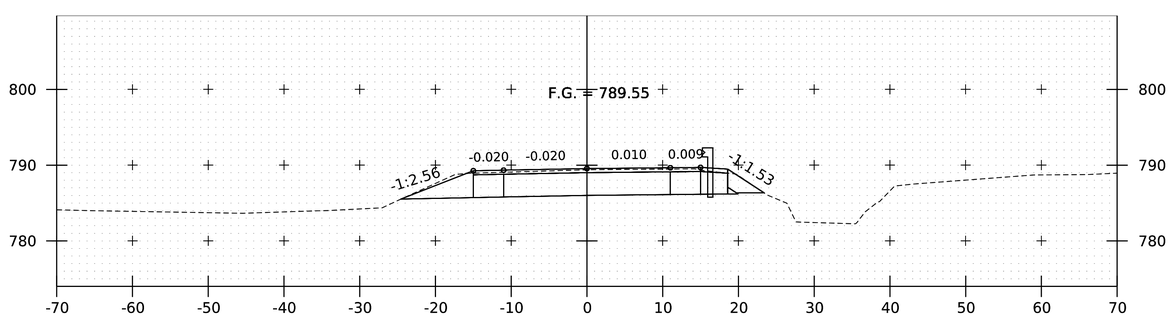

110+50

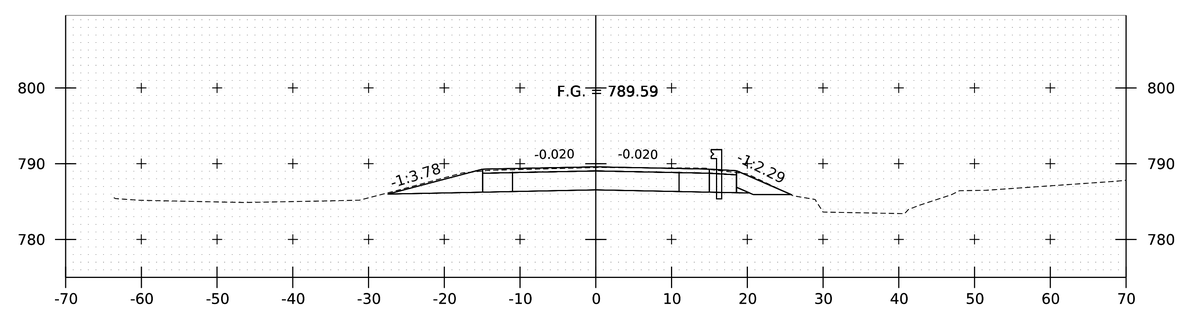

111+25

PROJECT NAME: COVENTRY	
PROJECT NUMBER: BF 025I(49)	
FILE NAME: s2lb025mainlinexs.dgn	PLOT DATE: 21-NOV-2023
PROJECT LEADER: R. KLINEFELTER	DRAWN BY: S. COLEY
DESIGNED BY: S. COLEY	CHECKED BY: R. KLINEFELTER
VT 14 CROSS SECTIONS 4	SHEET 29 OF 34

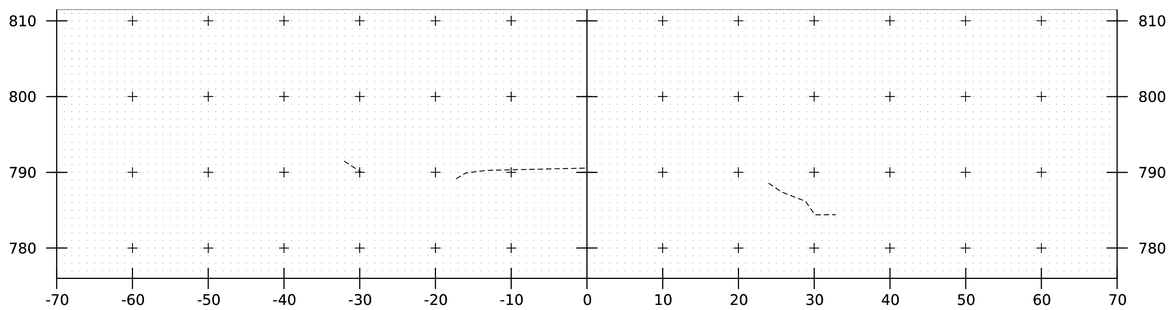

112+45

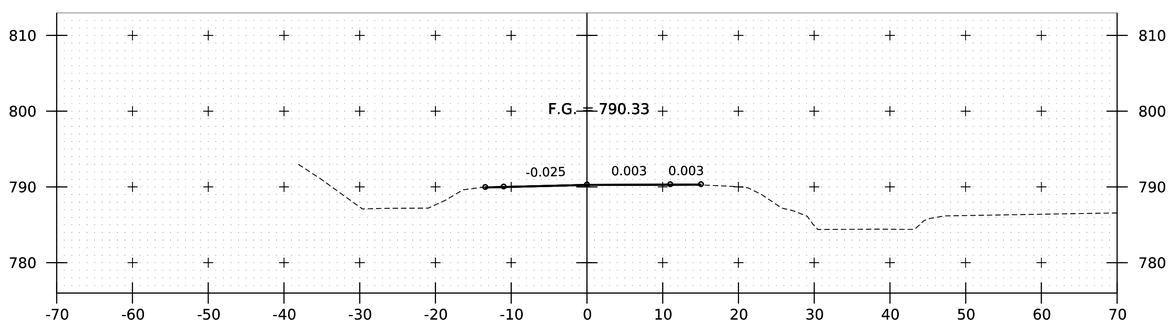

112+25

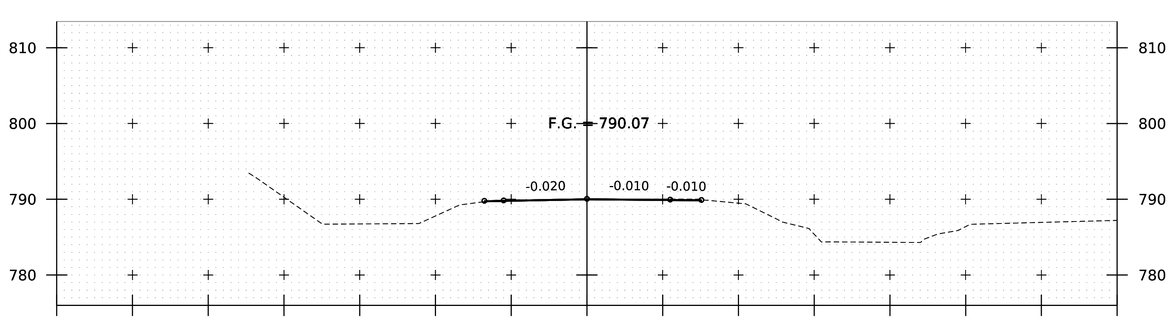

112+00

PROJECT NAME: COVENTRY	
PROJECT NUMBER: BF 025I(49)	
FILE NAME: s21b025mainlinexs.dgn	PLOT DATE: 21-NOV-2023
PROJECT LEADER: R. KLINEFELTER	DRAWN BY: S. COLEY
DESIGNED BY: S. COLEY	CHECKED BY: R. KLINEFELTER
VT 14 CROSS SECTIONS 5	SHEET 30 OF 34

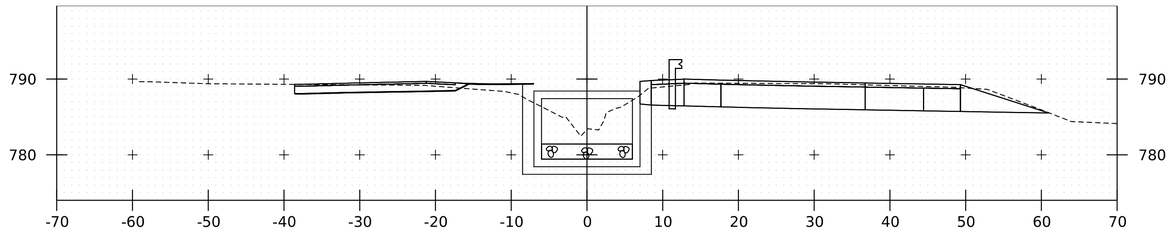

STA 50+28.60
END: UNCLASSIFIED CHANNEL EXCAVATION
STONE FILL TYPE II
GEOTEXTILE FOR STONE FILL
GRUBBING MATERIAL

50+30

STA 50+28.60
END: STONE FILL TYPE II
GEOTEXTILE FOR STONE FILL
GRUBBING MATERIAL

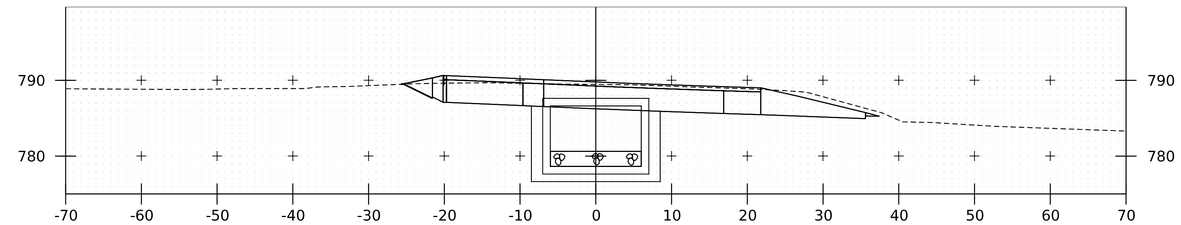

50+70

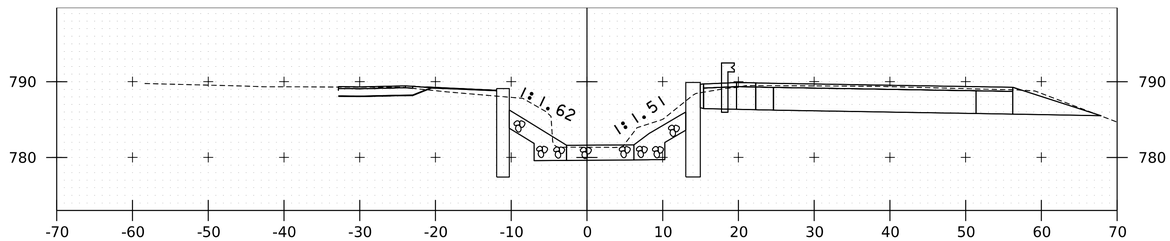

50+20

STA 50+11.10
BEGIN: STONE FILL TYPE II
GEOTEXTILE FOR STONE FILL
GRUBBING MATERIAL

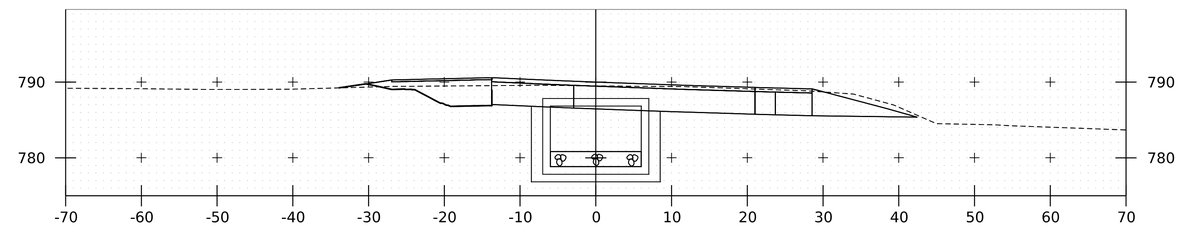

50+60

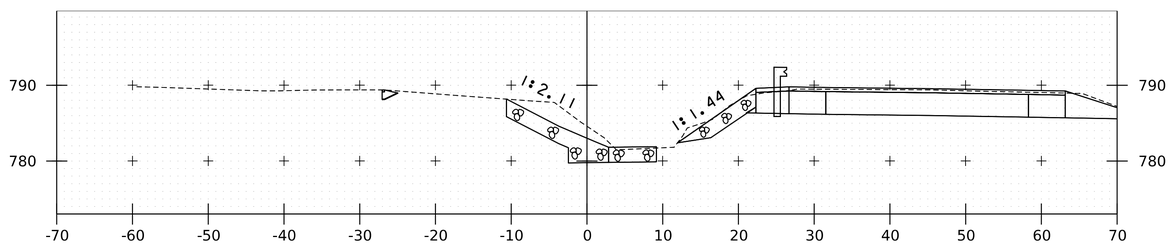

STA 50+00.61
BEGIN: UNCLASSIFIED CHANNEL EXCAVATION
STONE FILL TYPE II
GEOTEXTILE FOR STONE FILL
GRUBBING MATERIAL

50+10

STA 50+07.40
BEGIN: STONE FILL, STREAM BED MATERIAL (TYPE II)

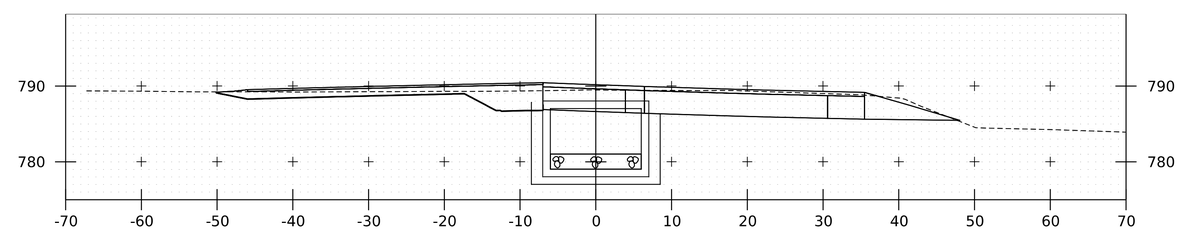

50+50

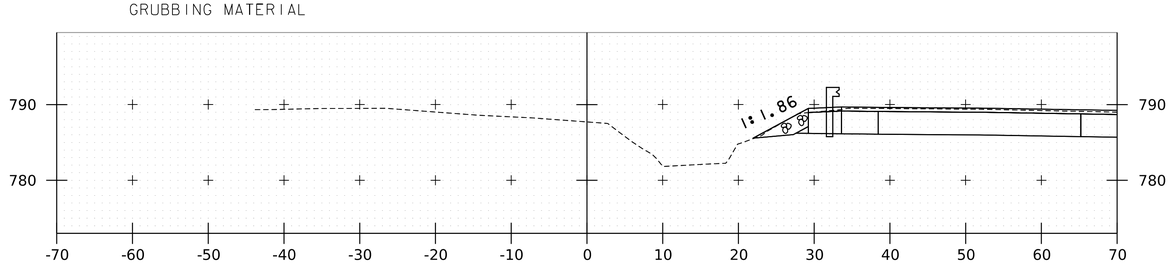

50+00

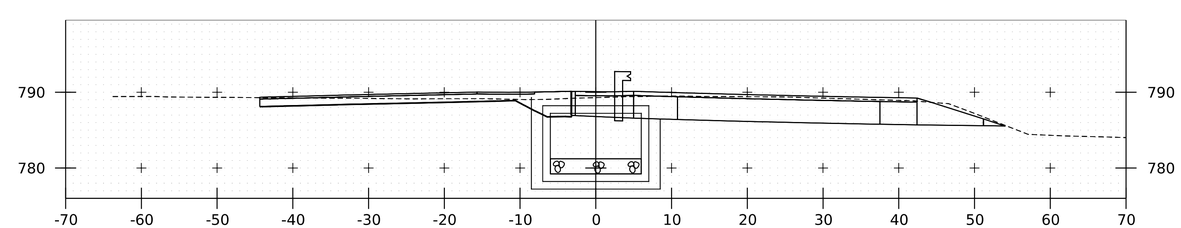

50+40

PROJECT NAME: COVENTRY	
PROJECT NUMBER: BF 025I(49)	
FILE NAME: s2lb025channelxs.dgn	PLOT DATE: 21-NOV-2023
PROJECT LEADER: R. KLINEFELTER	DRAWN BY: S. COLEY
DESIGNED BY: S. COLEY	CHECKED BY: R. KLINEFELTER
CHANNEL CROSS SECTIONS I	SHEET 31 OF 34

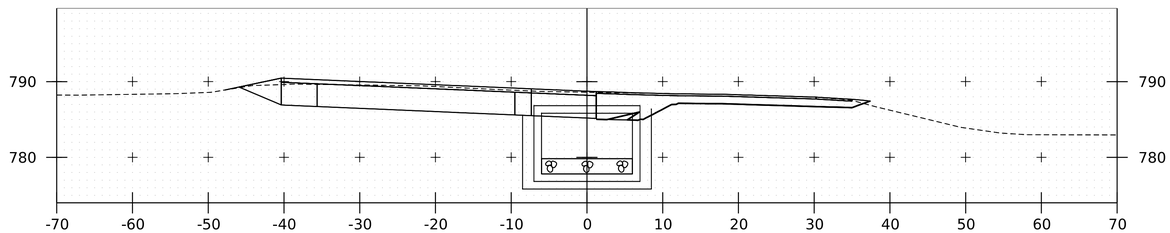

51+10

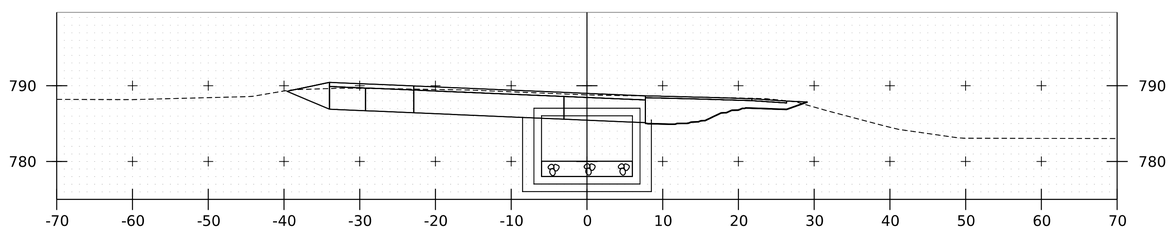

51+00

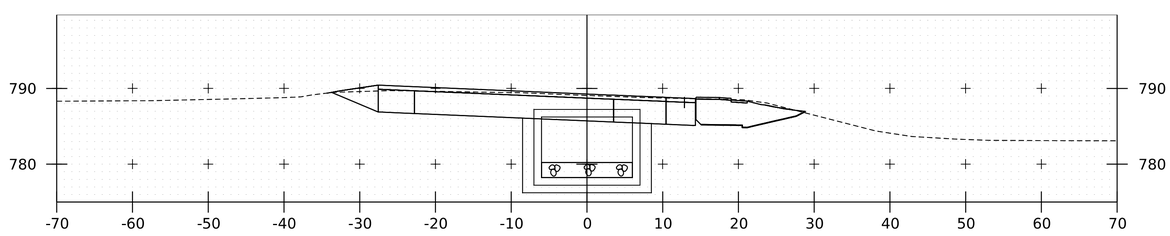

50+90

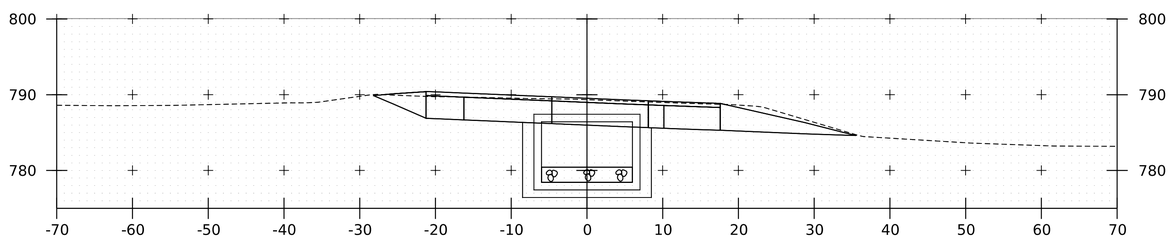

50+80

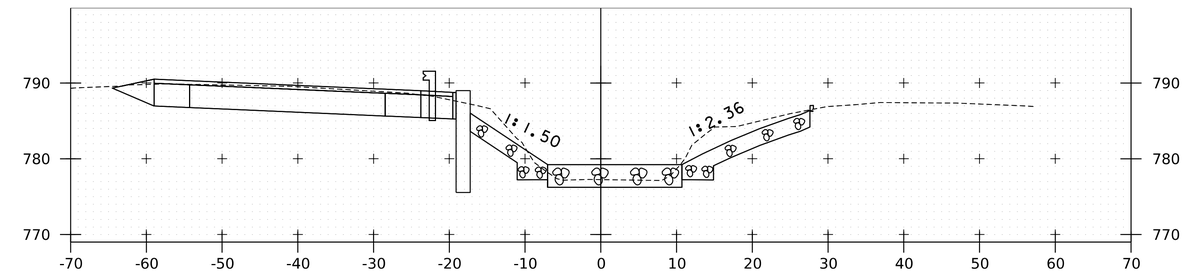

51+40

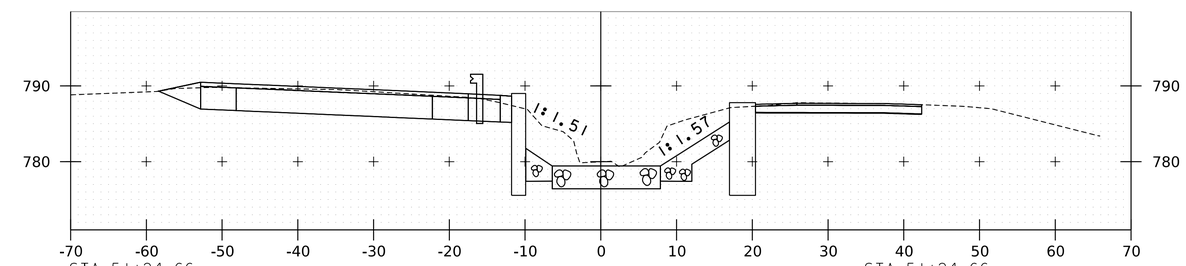

STA 51+24.66
BEGIN: UNCLASSIFIED CHANNEL EXCAVATION
STONE FILL TYPE II
GEOTEXTILE FOR STONE FILL
GRUBBING MATERIAL

51+30

STA 51+24.66
BEGIN: STONE FILL TYPE II
GEOTEXTILE FOR STONE FILL
GRUBBING MATERIAL

STA 51+23.49
END: STONE FILL, STREAM BED MATERIAL (TYPE II)
BEGIN: STONE FILL, STREAM BED MATERIAL (TYPE III)

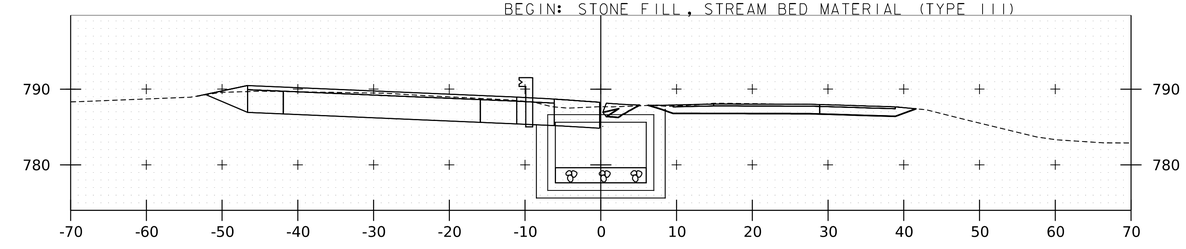

51+20

PROJECT NAME: COVENTRY	
PROJECT NUMBER: BF 025I(49)	
FILE NAME: s2lb025channelxs.dgn	PLOT DATE: 21-NOV-2023
PROJECT LEADER: R. KLINEFELTER	DRAWN BY: S. COLEY
DESIGNED BY: S. COLEY	CHECKED BY: R. KLINEFELTER
CHANNEL CROSS SECTIONS 2	SHEET 32 OF 34

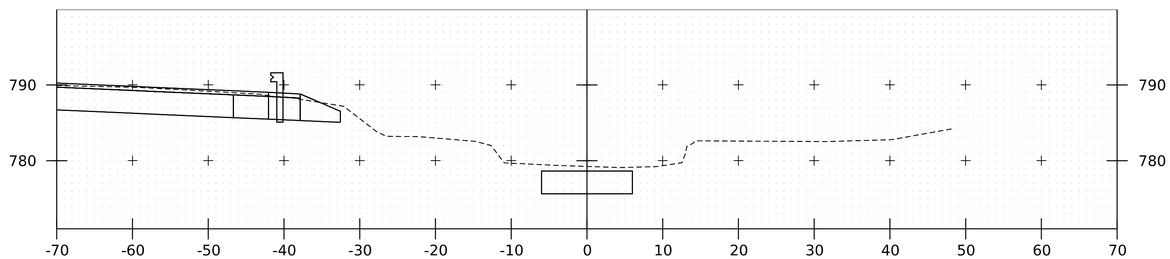

STA 50+67.72
END: UNCLASSIFIED CHANNEL EXCAVATION
STONE FILL TYPE II
GEOTEXTILE FOR STONE FILL
GRUBBING MATERIAL

51+70

STA 51+62.72
END: STONE FILL, STREAM BED MATERIAL (TYPE III)

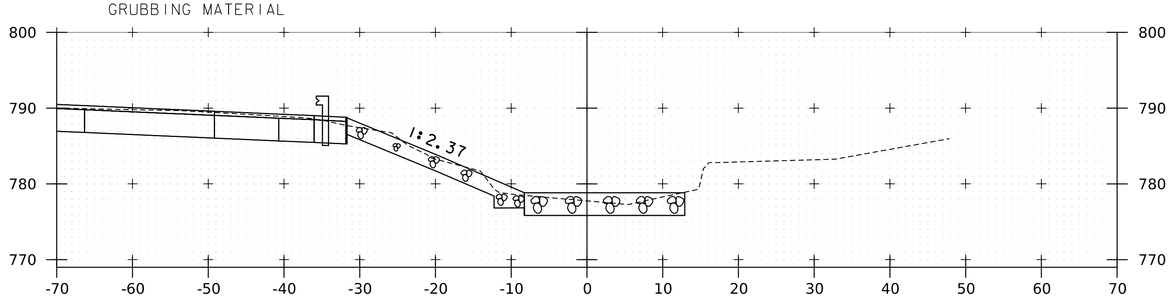

51+60

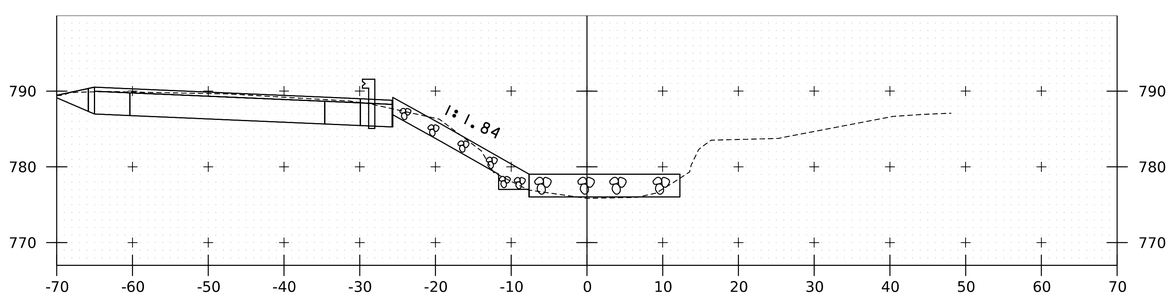

51+50

STA 51+47.94
END: STONE FILL TYPE II
GEOTEXTILE FOR STONE FILL
GRUBBING MATERIAL

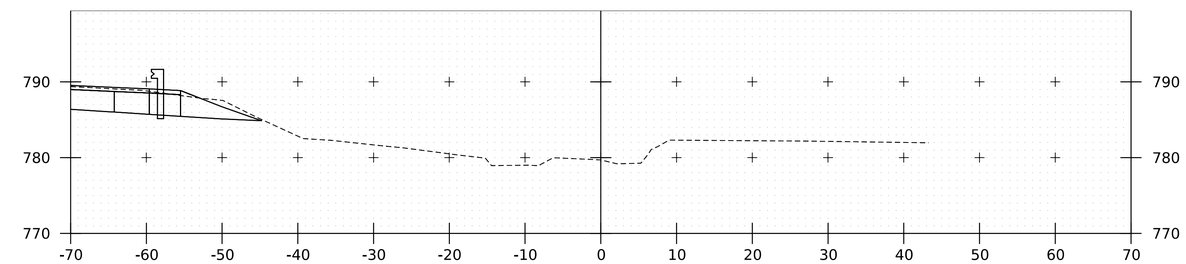

52+00

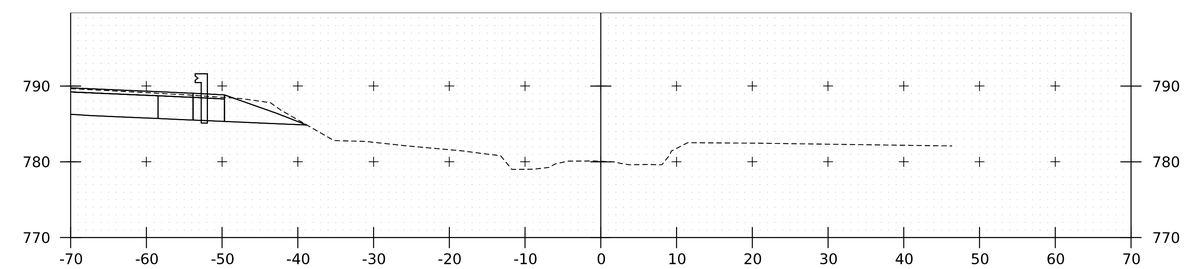

51+90

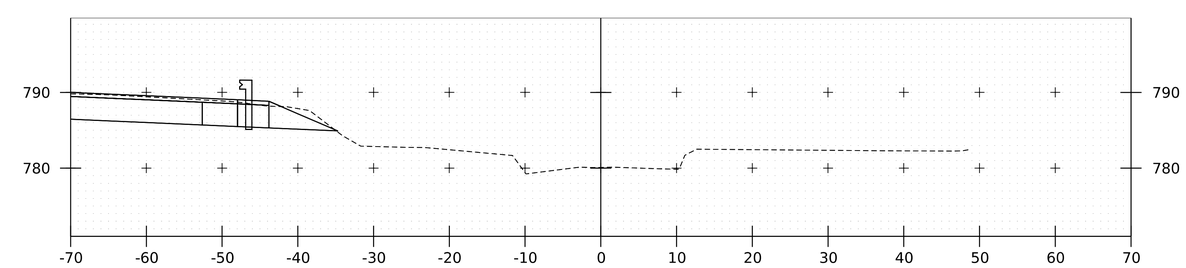

51+80

PROJECT NAME: COVENTRY	
PROJECT NUMBER: BF 0251(49)	
FILE NAME: s21b025channelxs.dgn	PLOT DATE: 21-NOV-2023
PROJECT LEADER: R. KLINEFELTER	DRAWN BY: S. COLEY
DESIGNED BY: S. COLEY	CHECKED BY: R. KLINEFELTER
CHANNEL CROSS SECTIONS 3	SHEET 33 OF 34

VAOT LOW GROW/FINE FESCUE MIX

	LBS/AC					
WEIGHT	BROADCAST	HYDROSEED	NAME	LATIN NAME	GERM	PURITY
38%	57	95	CREEPING RED FESCUE	FESTUCA RUBRA VAR. RUBRA	90%	98%
29%	43.5	72.5	HARD FESCUE	FESTUCA LONGIFOLIA	85%	95%
15%	22.5	37.5	CHEWINGS FESCUE	FESTUCA RUBRA VAR. COMMUTATA	87%	95%
15%	22.5	37.5	ANNUAL RYEGRASS	LOLIUM MULTIFLORUM	90%	95%
3%	4.5	7.5	INERTS			
100%	150	250				

VAOT RURAL AREA MIX

	LBS/AC					
WEIGHT	BROADCAST	HYDROSEED	NAME	LATIN NAME	GERM	PURITY
37.5%	22.5	45	CREEPING RED FESCUE	FESTUCA RUBRA VAR. RUBRA	85%	98%
37.5%	22.5	45	TALL FESCUE	FESTUCA ARUNDINACEA	90%	95%
5.0%	3	6	RED TOP	AGROSTIS GIGANTEA	90%	95%
15.0%	9	18	WHITE FIELD CLOVER	TRIFOLIUM REPENS	85%	98%
5.0%	3	6	ANNUAL RYE GRASS	LOLIUM MULTIFLORUM	85%	95%
100%	60	120				

GENERAL AMENDMENT GUIDANCE

FERTILIZER	LIME	
10/20/10	AG LIME	PELLITIZED
500 LBS/AC	2 TONS/AC	1 TONS/AC

CONSTRUCTION GUIDANCE

1. SEED MIX: THE CONTRACTOR SHALL COORDINATE WITH THE RESIDENT ENGINEER ON WHICH SEED MIX TO USE.
2. SEED MIX: USE AS INDICATED IN THE PLANS AND/OR FOR ALL ESTABLISHED UPLAND (NON WETLAND) AREAS DISTURBED BY THE CONTRACTOR.
3. ALL SEED MIXTURES: SHALL NOT HAVE A WEED CONTENT EXCEEDING 0.40% BY WEIGHT AND SHALL BE FREE OF ALL NOXIOUS SEED.
4. FERTILIZER AND LIMESTONE: SHALL FOLLOW RATES SHOWN ON PLAN OR AS DIRECTED BY THE ENGINEER.
5. HAY MULCH: TO BE PLACED ON EARTH SLOPES AT THE RATE OF 2 TONS/ACRE, ACHIEVE 90% GROUND COVER OR AS DIRECTED BY THE ENGINEER.
6. HYDROSEEDING: ALTHOUGH GUIDANCE IS GIVEN ABOVE THE SITE CONDITIONS AND THE TYPE OF HYDROSEED PROPOSED FOR USE WILL ULTIMATELY DICTATE THE AMOUNTS AND TYPES OF SOIL AMENDMENTS TO BE APPLIED.
7. TURF ESTABLISHMENT: PLACING SEED, FERTILIZER, LIME AND MULCH PRIOR TO SEPTEMBER 15 AND AFTER APRIL 15 CAN BETTER ENSURE A VIGOROUS GROWTH OF GRASS.

ADAPTED FROM VTRANS TECHNICAL LANDSCAPE MANUAL FOR ROADWAYS AND TRANSPORTATION FACILITIES

TURF ESTABLISHMENT

THIS WORK SHALL BE PERFORMED IN ACCORDANCE WITH SECTION 651FOR SEED (PAY ITEM 651.15)

REVISIONS	
JANUARY 12, 2015	WHF

PROJECT NAME: COVENTRY
PROJECT NUMBER: BF 0251(49)

FILE NAME: 21b025ero
PROJECT LEADER: R. KLINEFELTER
DESIGNED BY: S. COLEY
EPSC DETAILS

PLOT DATE: 21-NOV-2023
DRAWN BY: S. COLEY
CHECKED BY: R. KLINEFELTER
SHEET 34 OF 34

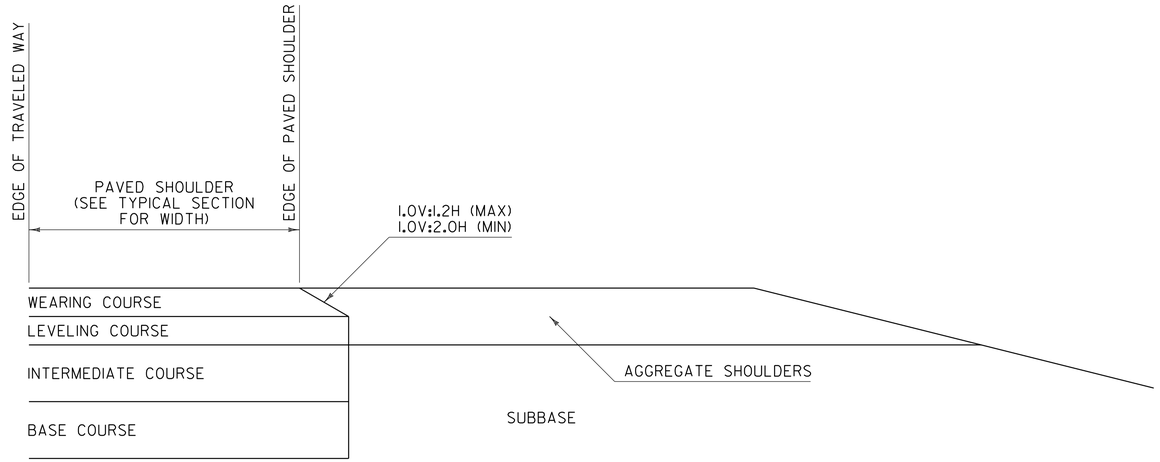

SAFETY EDGE DETAIL
FOR PAVING BELOW WEARING COURSE

NOTES:

1. THIS DETAIL IS INTENDED FOR WHEN PAVING EXTENDS BELOW THE WEARING COURSE.
2. PRIOR TO PLACEMENT OF THE LEVELING AND/OR WEARING COURSE, THE SUBBASE LOCATED BENEATH THE AGGREGATE SHOULDERS SHALL BE PREPARED FLUSH WITH THE BOTTOM OF THE LEVELING COURSE.
3. BASE COURSE LIMITS MAY VARY, SEE TYPICAL SECTIONS FOR WIDTH.

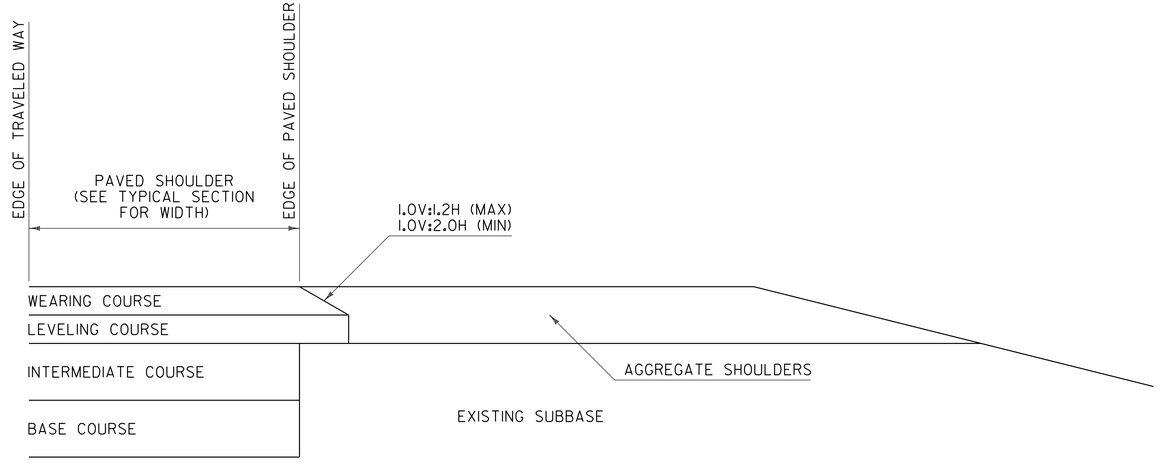

SAFETY EDGE DETAIL
FOR PAVING WEARING COURSE ONLY

NOTES:

1. THIS DETAIL IS INTENDED FOR WHEN ONLY THE LEVELING AND/OR WEARING COURSE IS TO BE PLACED.
2. PAVEMENT COURSES MAY VARY, SEE TYPICAL SECTIONS FOR ACTUAL PAVEMENT COURSES REQUIRED.

SAFETY EDGE WIDTH BASED ON WEARING COURSE THICKNESS AND A 1V:1.6H SLOPE	
WEARING COURSE THICKNESS (INCHES)	NOMINAL SAFETY EDGE WIDTH (INCHES)
1.25	2.000
1.50	2.375
1.75	2.750
2.00	3.125
2.25	3.500
2.50	4.000

GENERAL NOTES:

1. PLACEMENT OF THE WEARING COURSE SHALL INCLUDE THE SAFETY EDGE, UNLESS THE FOLLOWING APPLIES:
   - A. THE ADJACENT SLOPE IS STEEPER THAN THE SAFETY EDGE.
   - B. THE EDGE OF PAVEMENT BEING PLACED ABUTS BOUND MATERIAL.
   - C. VEHICLES ARE RESTRICTED FROM LEAVING THE PAVED SURFACE (EXAMPLE: GUARDRAIL).
2. THE SAFETY EDGE SHALL BE FORMED IN SUCH A WAY THAT THE BITUMINOUS CONCRETE PAVEMENT IS EXTRUDED OR COMPRESSED TO FORM THE SLOPE. DEVICES THAT SIMPLY STRIKE-OFF THE MIX WITHOUT PROVIDING ANY COMPACTIVE EFFORT WILL NOT BE ALLOWED.
3. THE SAFETY EDGE SHALL NOT BE CONSIDERED PART OF THE PAVED SHOULDER.
4. THIS WORK SHALL BE INCIDENTAL TO THE RESPECTIVE BITUMINOUS CONCRETE PAVEMENT ITEM.

REV.	DATE	DESCRIPTION
0	MAR. 29, 2016	ORIGINAL APPROVAL
1	JAN. 5, 2018	ANNOTATION CORRECTIONS

OTHER DETAILS REQUIRED: NONE

DETAILS APPROVED FOR USE BY HIGHWAY SAFETY & DESIGN

SAFETY EDGE DETAILS

VTrans Working to Get You There VERMONT AGENCY OF TRANSPORTATION

HIGHWAY SAFETY & DESIGN DETAIL

HSD-400.01

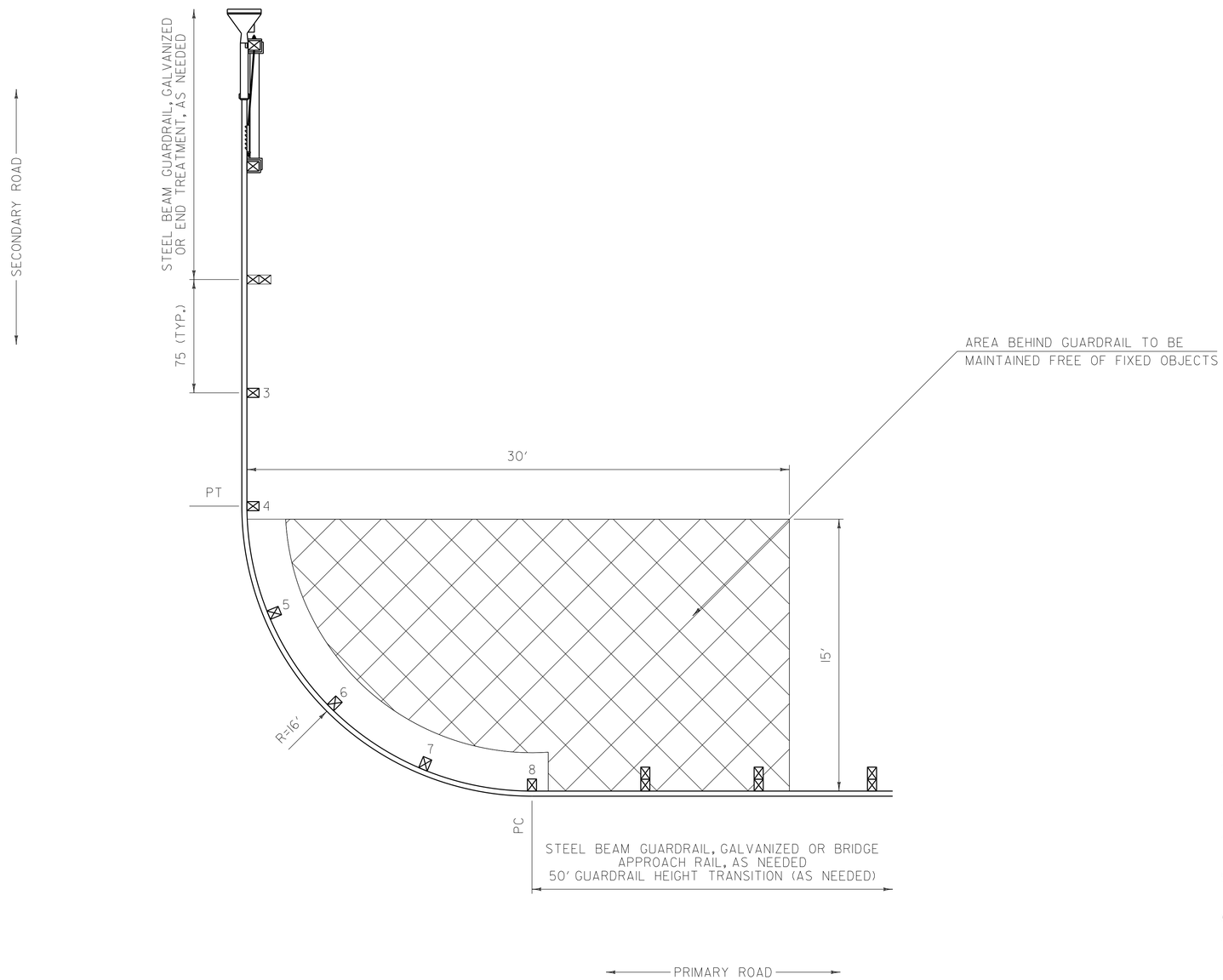

GENERAL NOTES:

1. ALL MATERIAL DESIGNATIONS ARE AS IDENTIFIED IN "A GUIDE TO STANDARDIZED HIGHWAY BARRIER HARDWARE" AS PUBLISHED BY THE "AMERICAN ASSOCIATION OF STATE AND HIGHWAY TRANSPORTATION OFFICIALS" (AASHTO), ASSOCIATED GENERAL CONTRACTORS OF AMERICA (AGC) AND THE AMERICAN ROAD AND TRANSPORTATION BUILDERS ASSOCIATION (ARTBA).
2. STEEL BEAM GUARDRAIL, GALVANIZED/16 FOOT RADIUS SHALL BE INSTALLED AT A HEIGHT OF 31 INCHES TO THE TOP OF RAIL.
3. POSTS 3 THROUGH 8 SHALL BE CRT TIMBER POSTS, PDE09.
4. POSTS 3 THROUGH 8 SHALL HAVE GUARDRAIL BOLTS AND RECESSED NUTS, FBB03.
5. ALL GUARDRAIL PANELS SHALL BE W-BEAM GUARDRAIL, RWM02A AND SHALL BE SHOP BENT, WHERE APPLICABLE.
6. END TREATMENT SHOWN FOR REFERENCE ONLY.
7. BASED ON DETAILS IN FHWA'S TECHNICAL ADVISORY T 5040.32, APRIL 13, 1992 (FOR REFERENCE ONLY).
8. PAYMENT SHALL BE MADE UNDER VTRANS ITEM 620.20 STEEL BEAM GUARDRAIL, GALVANIZED
9. GUARDRAIL SHALL BE LAPPED IN THE DIRECTION OF THE NEAREST TRAVEL LANE.
10. ALL DIMENSIONS IN INCHES, UNLESS OTHERWISE NOTED.

REV.	DATE	DESCRIPTION
0	JUN. 9, 2015	ORIGINAL APPROVAL
1	MAR. 27, 2022	REMOVED SPECIAL PROVISION REFERENCES

OTHER DETAILS REQUIRED: HSD 621.01

DETAILS APPROVED FOR USE BY HIGHWAY SAFETY & DESIGN

STEEL BEAM GUARDRAIL, GALVANIZED/16 FOOT RADIUS

VTrans Working to Get You There VERMONT AGENCY OF TRANSPORTATION

HIGHWAY SAFETY & DESIGN DETAIL

HSD-621.03

GUARDRAIL DELINEATOR DETAIL

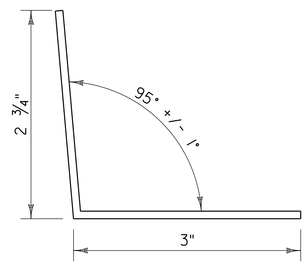

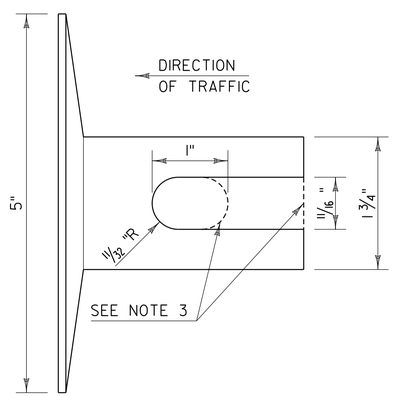

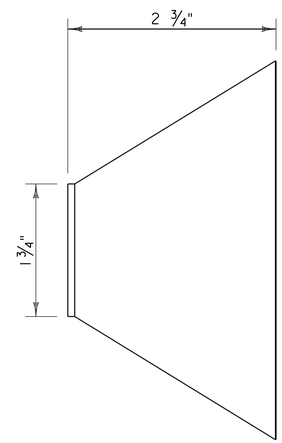

NOTES:

1. GUARDRAIL DELINEATOR BASE MATERIAL SHALL BE 0.10 INCH THICK ALUMINUM IN ACCORDANCE WITH SUBSECTION 728.04 DELINEATION DEVICES.
2. GUARDRAIL DELINEATORS SHALL HAVE WHITE RETROREFLECTIVE SHEETING, EQUAL TO OR EXCEEDING TYPE III IN ACCORDANCE WITH SUBSECTION 750.08(B)(3) ON THE RIGHT SIDE OF THE TRAVELED WAY AND YELLOW RETROREFLECTIVE SHEETING EQUAL TO OR EXCEEDING TYPE VII IN ACCORDANCE WITH SUBSECTION 750.08(B)(7) ON THE LEFT SIDE OF THE TRAVELED WAY IN RESPECT TO APPROACHING TRAFFIC. ON ONE DIRECTIONAL ROADWAYS RETROREFLECTIVE SHEETING MAY BE OMITTED ON FACES WHERE THERE WILL BE NO APPROACHING TRAFFIC.
3. HOLE MAY BE USED IN PLACE OF SLOT.

GUARDRAIL TERMINAL LABEL DETAIL

NOTES:

1. LINE ONE SHALL INDICATE THE INSTALLATION YEAR (YYYY).
2. LINE TWO SHALL INDICATE THE MODEL AS IDENTIFIED ON THE APPROVED PRODUCTS LIST. FOR GENERIC INSTALLATIONS THE STANDARD DRAWING DESIGNATION OR NAME AS IDENTIFIED IN THE FHWA ELIGIBILITY LETTER SHALL BE USED.
3. LINE THREE SHALL SHALL INDICATE ADDITIONAL MODEL INFORMATION IF NECESSARY.
4. LINE FOUR SHALL INDICATE FLARED (FLRD) OR TANGENT (TANG).
5. LEGEND SHALL BE SIZE 3/4 INCH ARIEL FONT.
6. LEGEND SHALL BE BLACK ON A WHITE BACKGROUND, LEGEND AND BACKGROUND SHALL NOT BE REFLECTIVE.
7. SUITABLE MATERIAL SHALL BE USED SO AS TO NOT DETERIORATE DURING EXPOSURE TO WEATHER.
8. LABELS SHALL BE APPLIED IN SUCH A WAY THAT THEY REMAIN INTACT DURING THE LIFE OF THE TERMINAL.
9. FOR W-BEAM GUARDRAIL, LABEL SHALL BE PLACED ON THE TOP OF POST ONE FACING AWAY FROM TRAFFIC.
10. FOR BOX BEAM GUARDRAIL, LABEL SHALL BE PLACED ON THE BOX BEAM ADJACENT TO POST ONE FACING AWAY FROM TRAFFIC.
11. PAYMENT SHALL BE INCIDENTAL TO OTHER TRAFFIC BARRIER ITEMS.

REV.	DATE	DESCRIPTION
0	NOV. 3, 2015	ORIGINAL APPROVAL
1	FEB. 27, 2017	UPDATED NAME, MINOR CORRECTIONS AND ADDED GUARDRAIL DELINEATOR DETAIL

OTHER DETAILS REQUIRED: NONE

DETAILS APPROVED FOR USE BY HIGHWAY SAFETY & DESIGN

MISCELLANEOUS GUARDRAIL DETAILS

VTrans Working to Get You There VERMONT AGENCY OF TRANSPORTATION

HIGHWAY SAFETY & DESIGN DETAIL

HSD-621.06

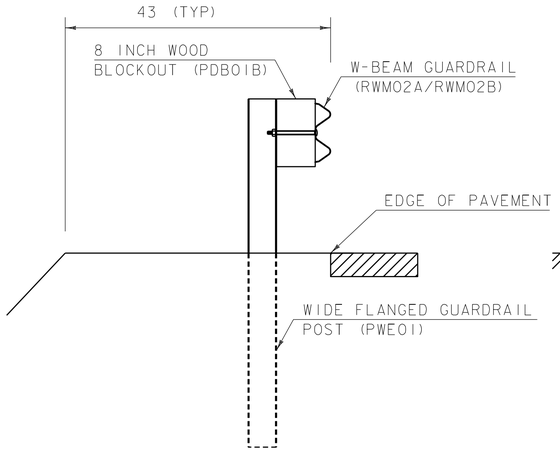

TYPICAL GUARDRAIL DETAIL
SECTION A-A

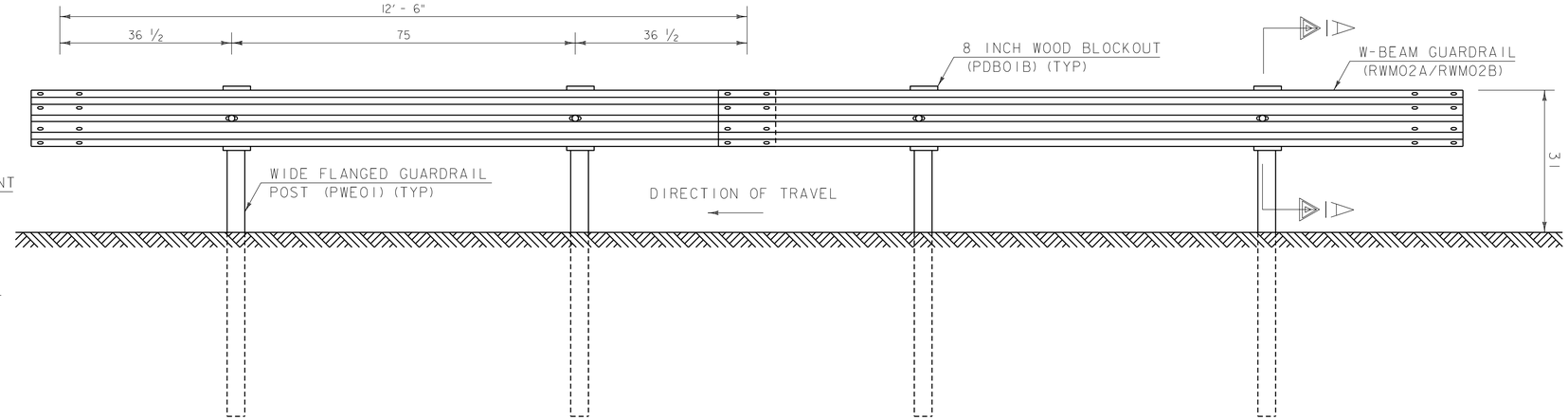

GUARDRAIL ELEVATION

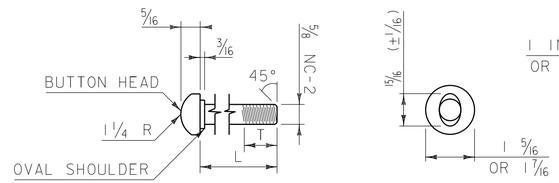

GUARDRAIL BOLT

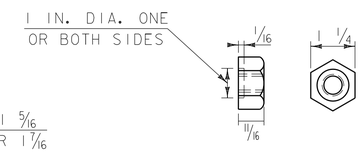

RECESSED NUT FOR GUARDRAIL BOLT

NOTE: WASHER IS USED UNDER RECESSED NUT WHERE GUARDRAIL BOLT IS USED WITH WOOD POSTS.

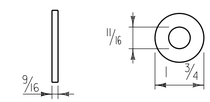

WASHER FOR 5/8" BOLTS
ARTBA F-13-73

GUARDRAIL BOLTS				FASTENER USED IN	
BOLT DES.	ARTBA REF. NO.	L	T (MIN.)	STEEL POSTS	WOOD POSTS
"A"	F-3[1 1/4]-76	1 1/4"	1"	X	X
"C"	F-3[9 1/2]-76	9 1/2"	1 3/4"	X	
"D"	F-3[18]-76	18"	2 1/2"		X
"F"	F-3[25]-76	25"	2"		X

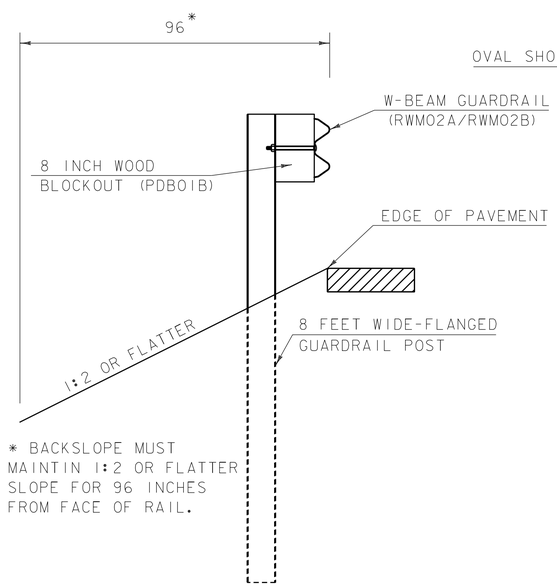

8 FEET POSTS GUARDRAIL DETAIL
SECTION A-A

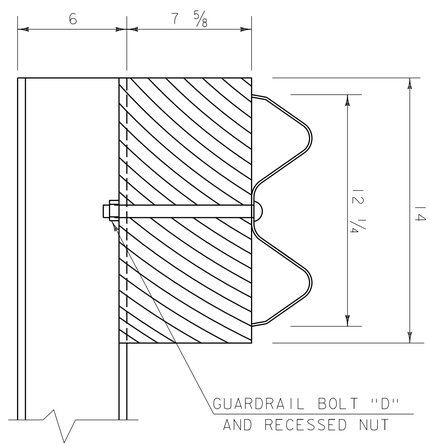

POST ATTATCHMENT DETAIL

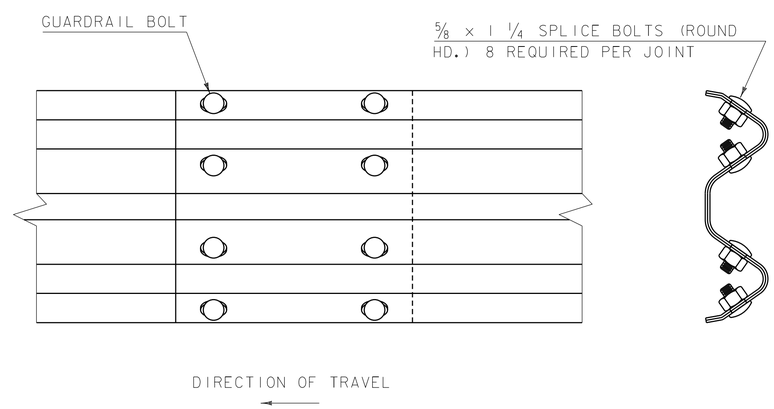

SPLICE DETAIL

GENERAL NOTES

1. DESIGNATIONS ARE AS IDENTIFIED IN "A GUIDE TO STANDARDIZED HIGHWAY BARRIER HARDWARE" AS PUBLISHED BY THE "AMERICAN ASSOCIATION OF STATE AND HIGHWAY TRANSPORTATION OFFICIALS" (AASHTO), "ASSOCIATED GENERAL CONTRACTORS OF AMERICA" (AGC) AND THE "AMERICAN ROAD AND TRANSPORTATION BUILDERS ASSOCIATION" (ARTBA).
2. MATERIALS SHALL BE IN ACCORDANCE WITH SECTION 728 OF THE CURRENT STANDARD SPECIFICATIONS FOR CONSTRUCTION, AND ITS LATEST REVISIONS, AS APPLICABLE.
3. WHEN W-BEAM GUARDRAIL, 8 FEET POSTS IS SPECIFIED ON THE PLANS, WIDE FLANGED GUARDRAIL POST (PWE01) SHALL BE INCREASED FROM 72 INCHES TO 96 INCHES, SEE DETAIL HSD-621.07B.
4. THE DYNAMIC DEFLECTION DISTANCE OF 57 INCHES FOR W BEAM GUARDRAIL SHALL BE MAINTAINED CLEAR OF OBSTACLES, TO BE MEASURED FROM THE BACK OF POST.
5. FOR TEST LEVEL 3 APPLICATIONS, AS APPROVED IN THE FEDERAL HIGHWAY ADMINISTRATION'S ELIGIBILITY LETTER, HSST/B-240, DATED NOVEMBER 8, 2012.
6. ALL DIMENSION IN INCHES, UNLESS OTHERWISE NOTED.

REV.	DATE	DESCRIPTION
--	APR. 17, 2019	ORIGINAL APPROVAL
1	JAN. 4, 2021	CORRECTED REFERENCE IN NOTE 3

OTHER DETAILS REQUIRED: 621.07B

DETAILS APPROVED FOR USE BY HIGHWAY SAFETY & DESIGN

MIDWEST GUARDRAIL SYSTEM (MGS)

VTrans Working to Get You There VERMONT AGENCY OF TRANSPORTATION

HIGHWAY SAFETY & DESIGN DETAIL

HSD-621.07A

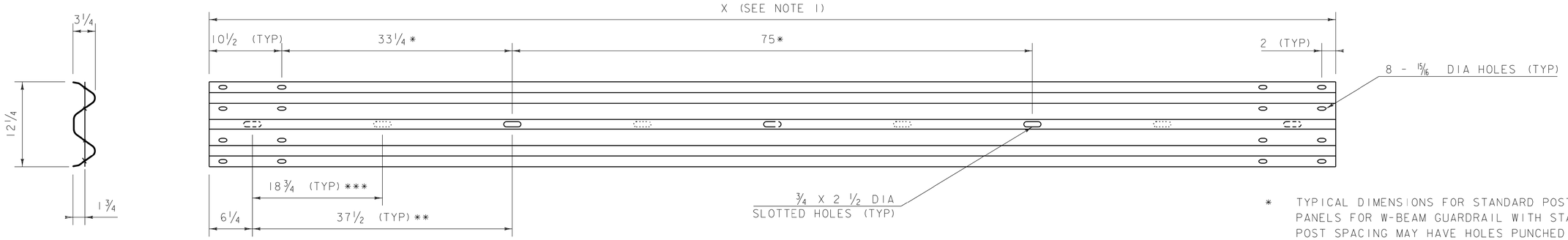

* TYPICAL DIMENSIONS FOR STANDARD POST SPACING. PANELS FOR W-BEAM GUARDRAIL WITH STANDARD POST SPACING MAY HAVE HOLES PUNCHED AT ONE-HALF POST SPACING FOR INVENTORY PURPOSES.
** TYPICAL DIMENSION FOR ONE-HALF POST SPACING.
*** TYPICAL DIMENSION FOR ONE-QUARTER POST SPACING.

1. TANGENT W-BEAM RAIL LENGTHS SHALL BE 13'-6 1/2" OR 26'-1/2", UNLESS OTHERWISE SPECIFIED.
2. W-BEAM THICKNESS SHALL BE 1/8" FOR STANDARD W-BEAM GUARDRAIL (RWM02A) AND 9/64" FOR HEAVY DUTY GUARDRAIL (RWM02B).

W-BEAM GUARDRAIL
(RWM02A/ RWM02B)

NOTES:

1. BLOCKS SHALL BE MADE OF TIMBER WITH A STRESS GRADE OF 1200 PSI OR MORE. TESTING SHALL BE IN ACCORDANCE WITH WEST COAST LUMBER INSPECTION BUREAU, SOUTHERN PINE INSPECTION BUREAU OR OTHER APPROPRIATE ASSOCIATION. TIMBER FOR BLOCKS SHALL BE ROUGH SAWN (UNPLANED) WITH DIMENSIONS INDICATED. THE SIZE TOLERANCE OF ROUGH SAWN BLOCKS IN THE DIRECTION OF THE BOLT HOLES SHALL BE NOT MORE THAN +/- 1/4".
2. SUPPLY WOOD BLOCKS PER AASHTO M 168.
3. TREAT WITH PRESERVATIVE PER AASHTO M 133.
4. BLOCKOUTS MAY ALSO BE MADE OF APPROVED ALTERNATIVE MATERIAL.

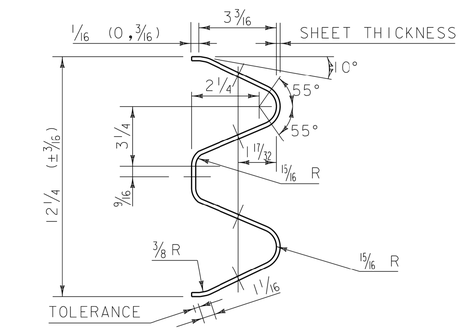

ARTBA RE-3 (2@6'-3"=12'-6" CLASS A, TYPE 1)-73

TYPICAL GUARDRAIL SECTION

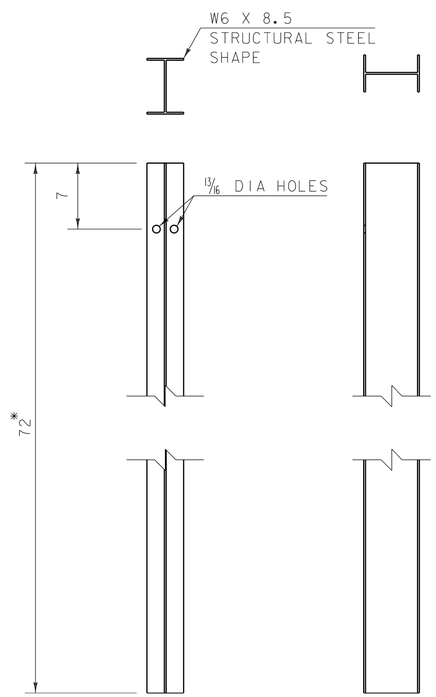

WIDE FLANGED GUARDRAIL POST
(PWE01)

* POST LENGTH SHALL BE INCREASED TO 96 INCHES WHEN W BEAM GUARDRAIL, 8 FEET POSTS IS SPECIFIED.

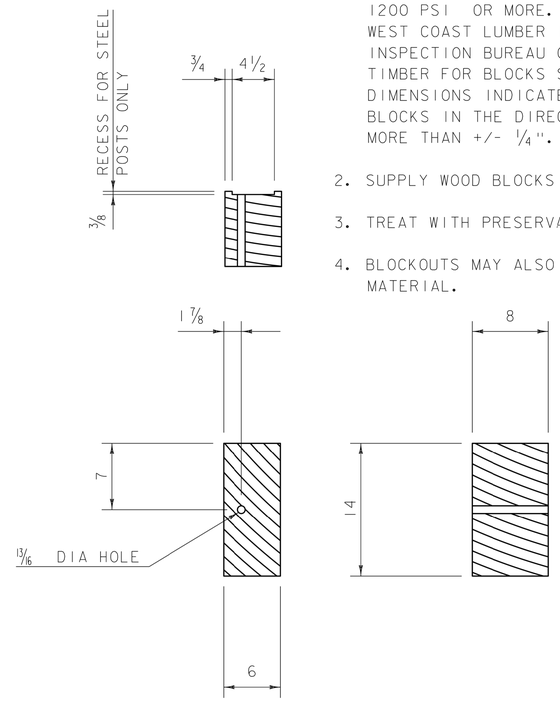

8 INCH WOOD BLOCKOUT
(PDB01B)

GENERAL NOTES

1. DESIGNATIONS ARE AS IDENTIFIED IN "A GUIDE TO STANDARDIZED HIGHWAY BARRIER HARDWARE" AS PUBLISHED BY THE "AMERICAN ASSOCIATION OF STATE AND HIGHWAY TRANSPORTATION OFFICIALS" (AASHTO), "ASSOCIATED GENERAL CONTRACTORS OF AMERICA" (AGC) AND THE "AMERICAN ROAD AND TRANSPORTATION BUILDERS ASSOCIATION" (ARTBA).
2. MATERIALS SHALL BE IN ACCORDANCE WITH SECTION 728 OF THE CURRENT STANDARD SPECIFICATIONS FOR CONSTRUCTION, AND ITS LATEST REVISIONS, AS APPLICABLE.
3. ALL DIMENSION IN INCHES, UNLESS OTHERWISE NOTED.

REV.	DATE	DESCRIPTION
--	APR. 17, 2019	ORIGINAL APPROVAL

OTHER DETAILS REQUIRED: NONE

DETAILS APPROVED FOR USE BY HIGHWAY SAFETY & DESIGN

W-BEAM GUARDRAIL COMPONENTS

VTrans Working to Get You There VERMONT AGENCY OF TRANSPORTATION

HIGHWAY SAFETY & DESIGN DETAIL

HSD-621.07B

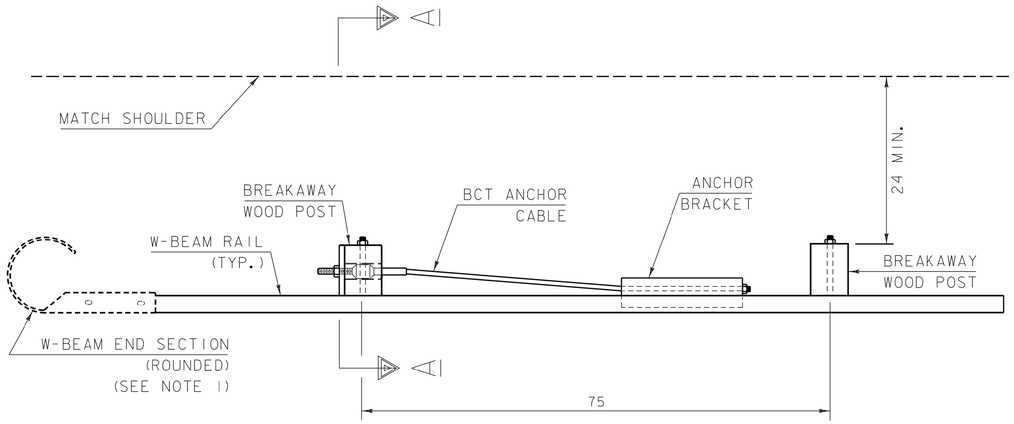

PLAN VIEW

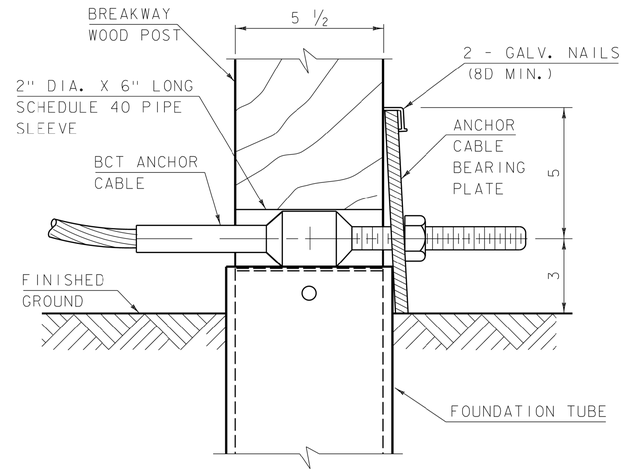

DETAIL A

POST NO. 1
GROUND STRUT NOT SHOWN FOR CLARITY.

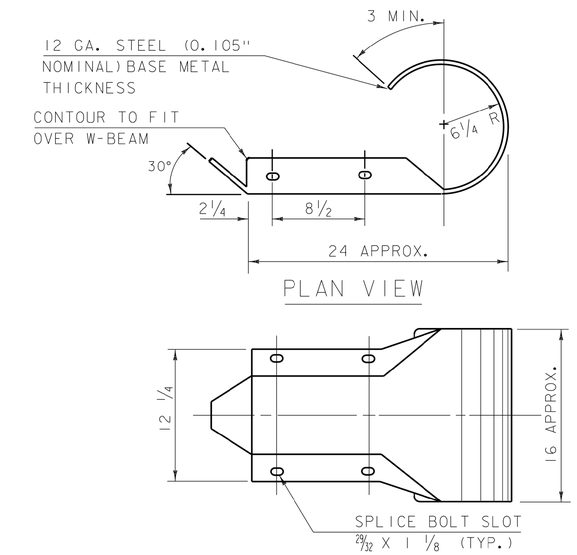

PLAN VIEW

PROFILE VIEW
W-BEAM END SECTION (ROUNDED)

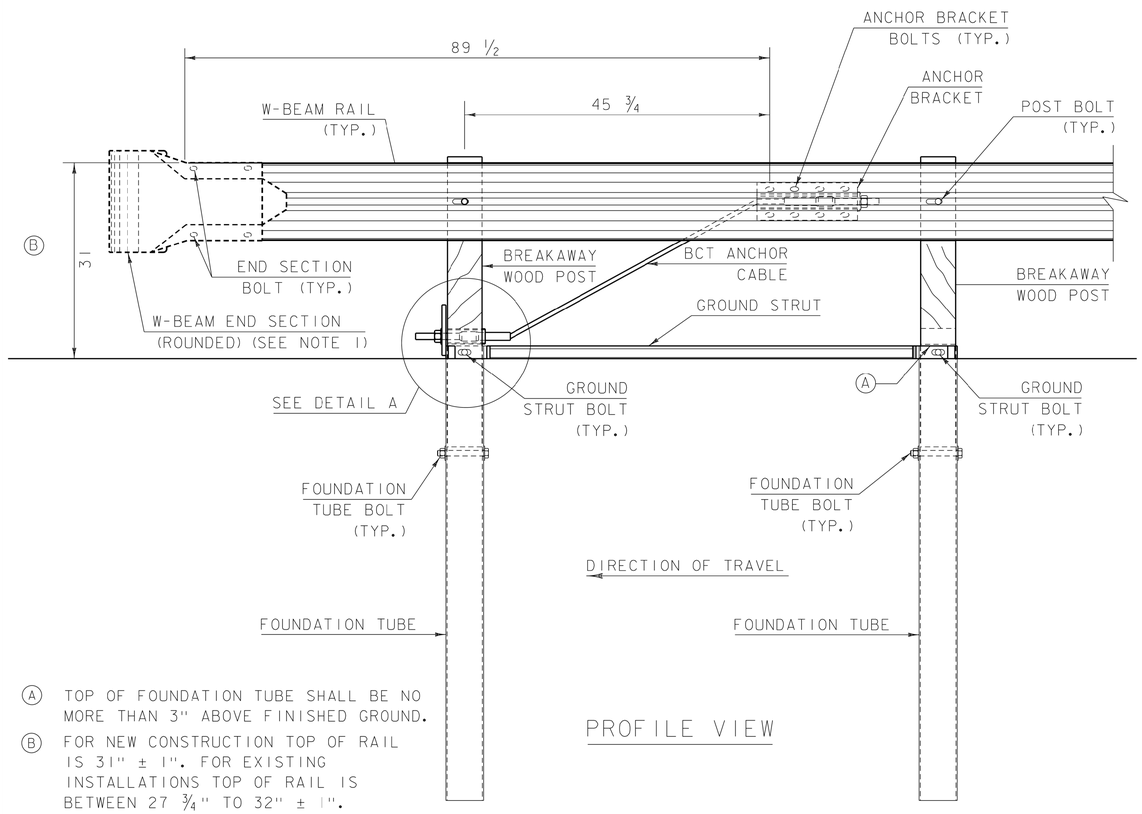

(A) TOP OF FOUNDATION TUBE SHALL BE NO MORE THAN 3" ABOVE FINISHED GROUND.

(B) FOR NEW CONSTRUCTION TOP OF RAIL IS 31" ± 1". FOR EXISTING INSTALLATIONS TOP OF RAIL IS BETWEEN 27 3/4" TO 32" ± 1".

PROFILE VIEW

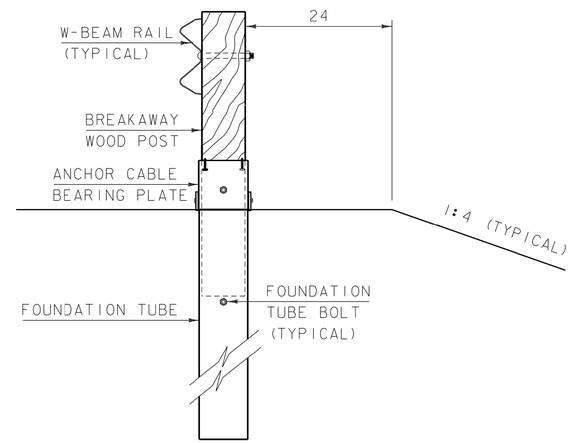

SECTION A-A

GENERAL NOTES

1. WHEN AN ANCHOR IS USED IN THE MIDDLE OF A GUARDRAIL RUN A STANDARD W-BEAM MID-SPLICE CONNECTION SHALL BE UTILIZED.
2. END SECTION SHALL ONLY BE INSTALLED AS TRAILING END ON ONE-WAY TRAFFIC ROADS.
3. W-BEAM END SECTION ROUNDED HAS THE SAME MATERIAL PROPERTIES AS STANDARD STEEL RAIL.
4. END SECTION BOLTS AND NUTS HAVE THE SAME MATERIAL REQUIREMENTS AS SPLICE BOLTS.
5. FOUNDATION TUBE BOLTS ARE 7/8" DIAMETER ASTM A307 HEX HEAD BOLT. FOUNDATION TUBE BOLTS REQUIRE ASTM A563 A NUT AND TWO ASTM F844 7/8" DIAMETER FLAT WASHERS. INSTALL ONE WASHER UNDER BOLT HEAD AND ONE WASHER UNDER NUT.
6. ANCHOR BRACKET AND GROUND STRUT BOLTS ARE A 5/8" DIAMETER ASTM A307 HEX HEAD BOLT. ANCHOR BRACKET BOLTS REQUIRE ASTM A563 A NUT AND TWO ASTM F844 5/8" DIAMETER FLAT WASHERS. INSTALL ONE WASHER UNDER BOLT HEAD AND ONE WASHER UNDER NUT.
7. W-BEAM END SECTION (ROUNDED) AND W-BEAM RAIL SHALL BE PAID FOR UNDER ITEM 621.20 STEEL BEAM GUARDRAIL GALVANIZED. ALL OTHER COMPONENTS SHALL BE PAID FOR UNDER ITEM 621.60 ANCHOR FOR STEEL BEAM RAIL.
8. ALL MEASUREMENTS ARE IN INCHES UNLESS OTHERWISE SPECIFIED.

REV.	DATE	DESCRIPTION
--	APR. 17, 2019	ORIGINAL APPROVAL

OTHER DETAILS REQUIRED: HSD-621.07D, HSD-621.07E

DETAILS APPROVED FOR USE BY HIGHWAY SAFETY & DESIGN

MIDWEST GUARDRAIL SYSTEM (MGS) ANCHOR

VTrans Working to Get You There VERMONT AGENCY OF TRANSPORTATION

HIGHWAY SAFETY & DESIGN DETAIL

HSD-621.07C

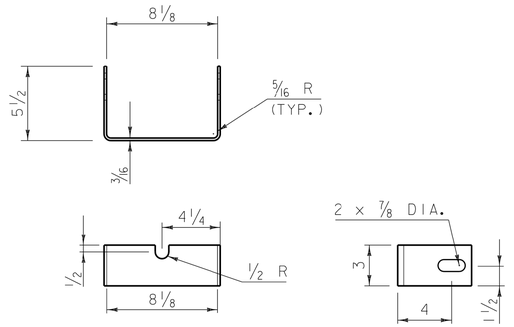

YOKE DETAIL

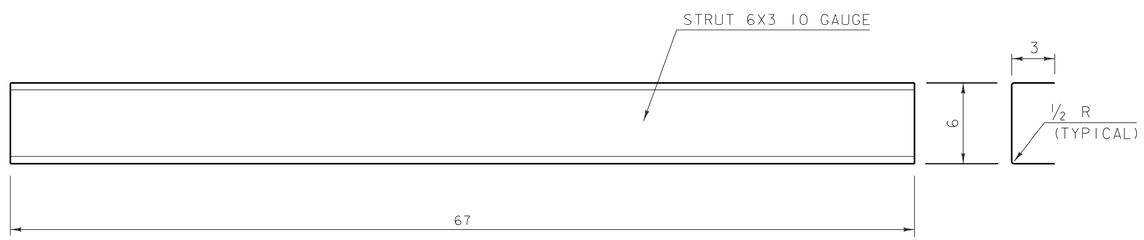

STRUT DETAIL

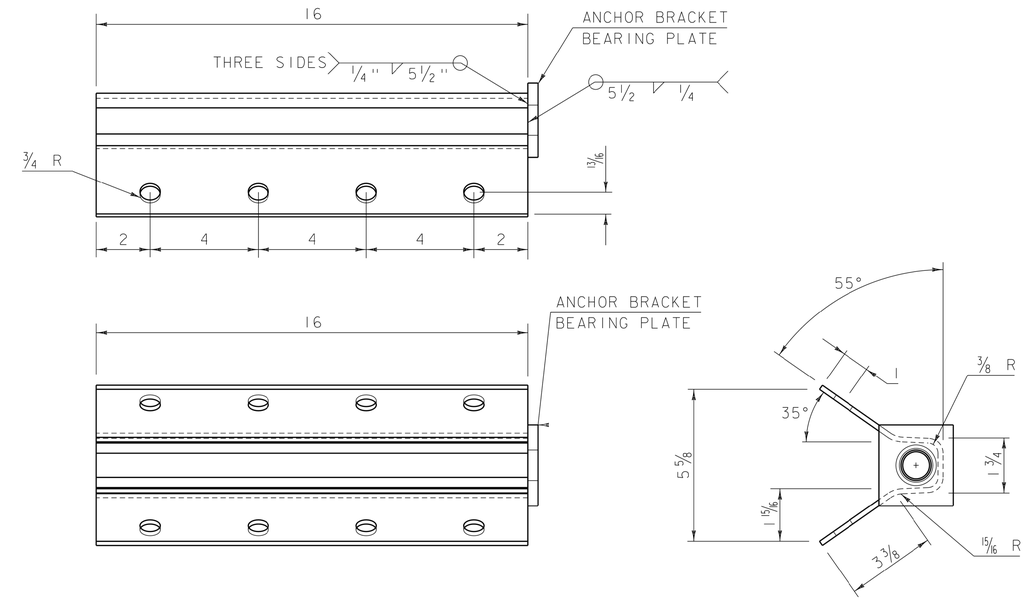

ANCHOR BRACKET

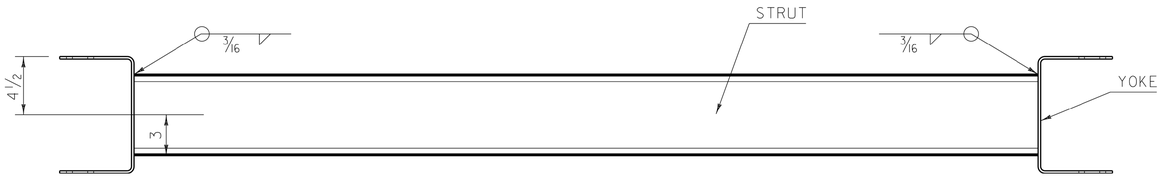

PLAN VIEW

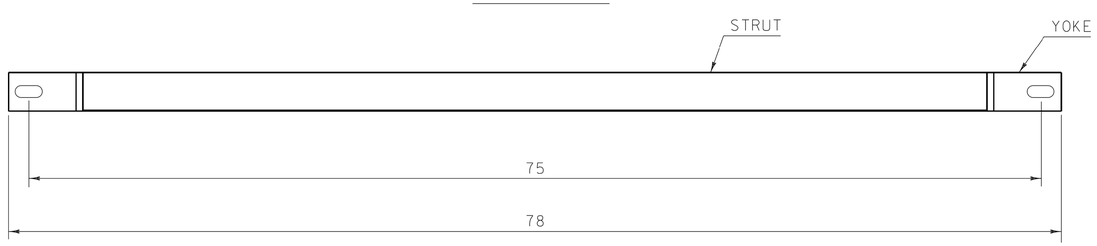

PROFILE VIEW

GROUND STRUT DETAIL

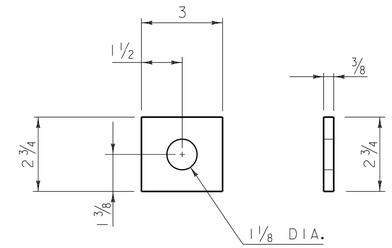

ANCHOR BRACKET
BEARING PLATE

GENERAL NOTES

1. ALL MEASUREMENTS ARE IN INCHES UNLESS OTHERWISE SPECIFIED.

REV.	DATE	DESCRIPTION
--	APR. 17, 2019	ORIGINAL APPROVAL

OTHER DETAILS REQUIRED: HSD-621.07C, HSD-621.07E

DETAILS APPROVED FOR USE BY HIGHWAY SAFETY & DESIGN

MIDWEST GUARDRAIL SYSTEM (MGS) ANCHOR COMPONENTS

VTrans Working to Get You There VERMONT AGENCY OF TRANSPORTATION

HIGHWAY SAFETY & DESIGN DETAIL

HSD-621.07D

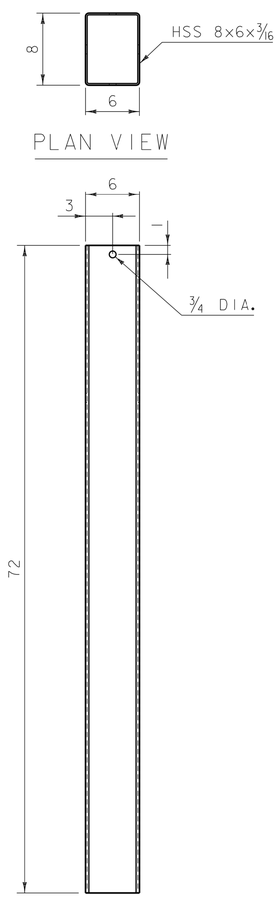

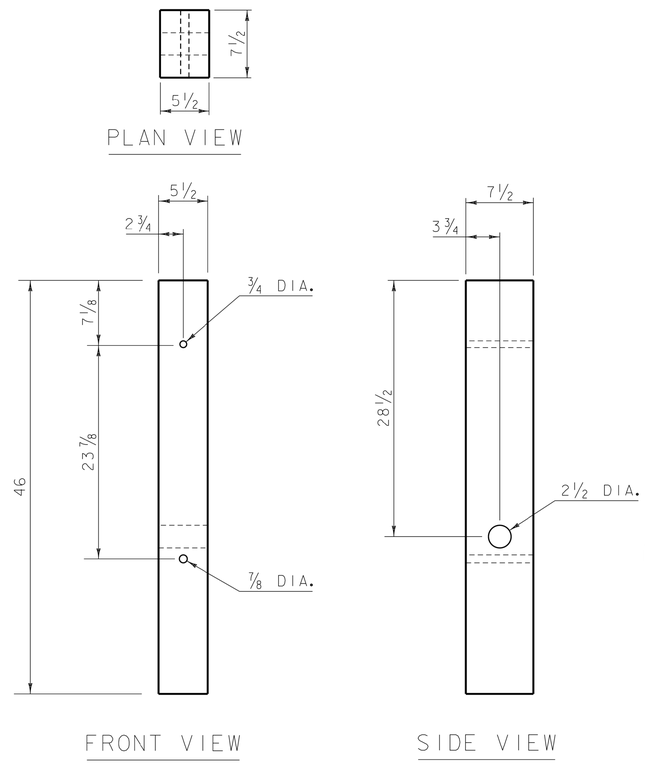

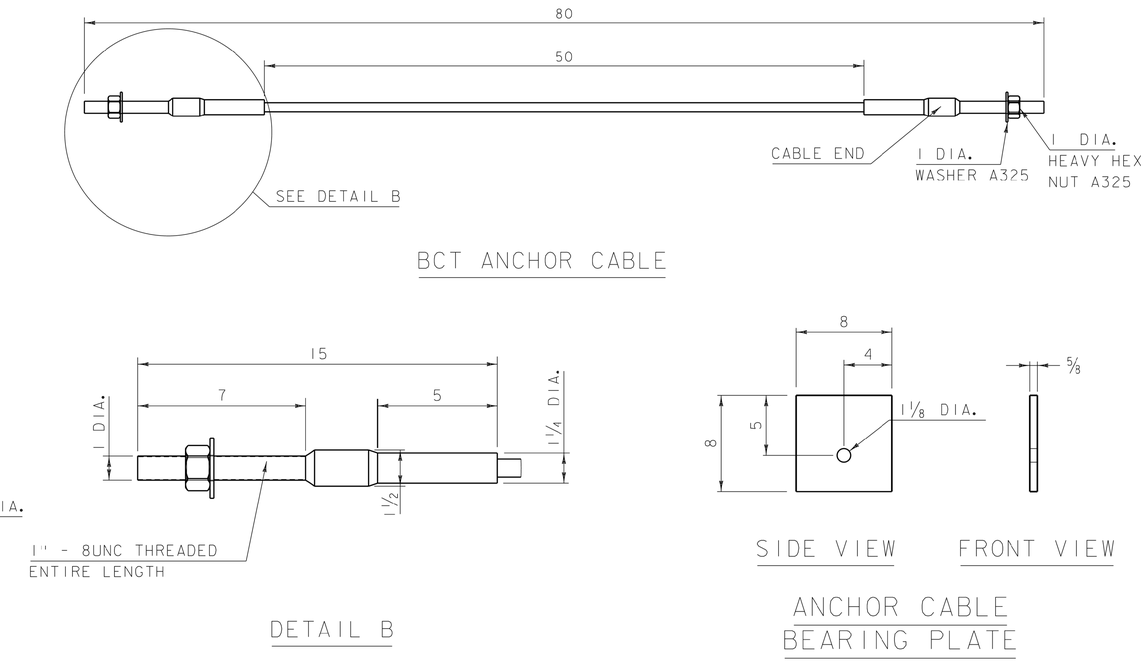

GENERAL NOTES

1. BCT ANCHOR CABLE IS A 3/4" DIAMETER 6X19 IWRC IPS GALVANIZED WIRE ROPE. THE SWAGED FITTINGS AND STUD ARE REQUIRED.
2. END FITTING SHALL BE MACHINED FROM HOT-ROLLED CARBON STEEL CONFORMING TO ASTM A576 GRADE 1035 AND GALVANIZED ACCORDING TO ASTM A123.
3. TREADED STUD SHALL CONFORM TO ASTM A325 OR SAE GRADE 5.
4. MINIMUM BREAKING STRENGTH OF WIRE ROPE IS 43,000 LB.
5. WIRE ROPE IS TO BE TAUT.
6. ALL MEASUREMENTS ARE IN INCHES UNLESS OTHERWISE SPECIFIED.

REV.	DATE	DESCRIPTION
--	APR. 17, 2019	ORIGINAL APPROVAL

OTHER DETAILS REQUIRED: HSD-621.07C, HSD-621.07D

DETAILS APPROVED FOR USE BY HIGHWAY SAFETY & DESIGN

MIDWEST GUARDRAIL SYSTEM (MGS) ANCHOR COMPONENTS

VTrans Working to Get You There VERMONT AGENCY OF TRANSPORTATION

HIGHWAY SAFETY & DESIGN DETAIL

HSD-621.07E

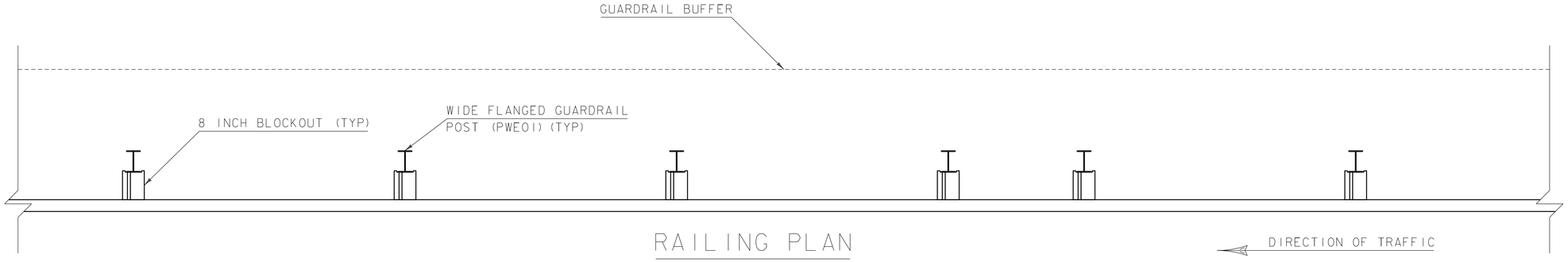

RAILING PLAN

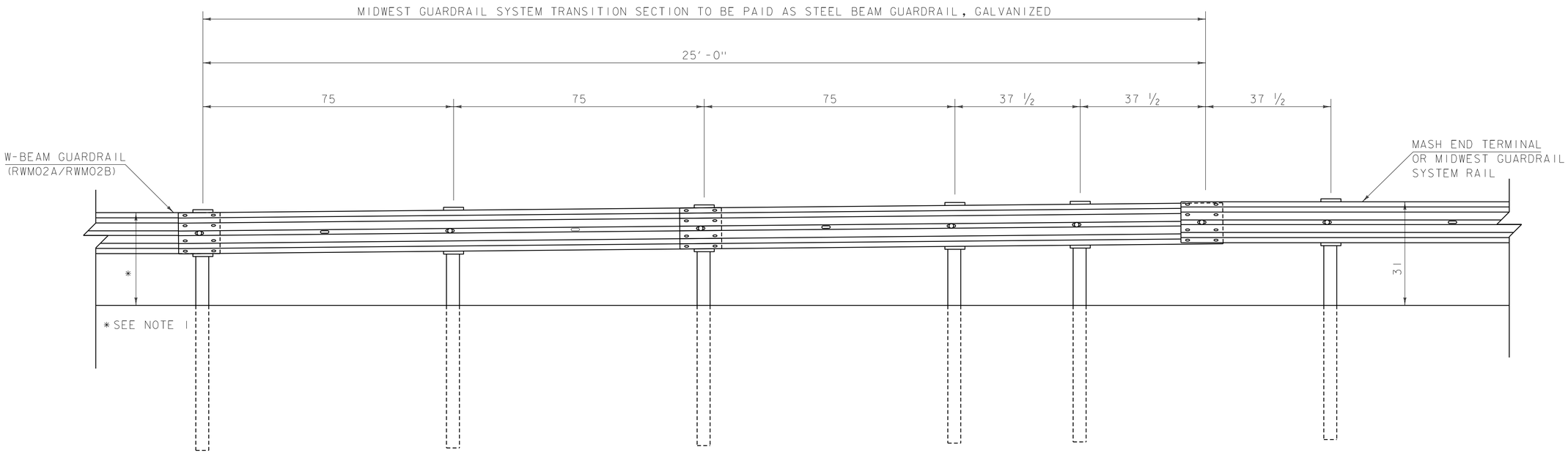

RAILING ELEVATION

GENERAL NOTES

1. THE HEIGHT OF RAIL AT THE END OF THIS TRANSITION SHALL MATCH THE DESIGN FOR THE APPLICABLE GUARDRAIL SYSTEM.
2. TRANSITIONS FROM 31 INCH HIGH MIDWEST GUARDRAIL SYSTEM TO OTHER RAIL SYSTEMS SHALL BE ACCOMPLISHED WITH 2 STANDARD 12½ FOOT SECTIONS OF W-BEAM RAIL.
3. POSTS, BLOCKOUTS AND SPLICES SHALL BE IN ACCORDANCE WITH DETAILS HSD-621.07A AND HSD-621.07B AND LOCATED AS SHOWN IN THE DETAILS ABOVE.
4. STANDARD 6 FOOT POSTS SHALL BE USED UNLESS OTHERWISE NOTED ON PLANS.
5. END TERMINAL SHALL BE A VTRANS APPROVED PRODUCT MEETING MASH TESTING CRITERIA. ANY TERMINAL USED SHALL BE FROM THE VTRANS APPROVED PRODUCTS LIST.
6. ALL MEASURMENTS ARE IN INCHES UNLESS OTHERWISE NOTED.

REV.	DATE	DESCRIPTION
--	APR. 17, 2019	ORIGINAL APPROVAL
1	JAN. 4, 2021	CORRECTED NOTE 3 REFERENCES

OTHER DETAILS REQUIRED: HSD-621.07A, HSD-621.07B

DETAILS APPROVED FOR USE BY HIGHWAY SAFETY & DESIGN

MIDWEST GUARDRAIL SYSTEM TRANSITION SECTION

VTrans Working to Get You There VERMONT AGENCY OF TRANSPORTATION

HIGHWAY SAFETY & DESIGN DETAIL

HSD-621.07F